© 2010 Moody•Nolan, Inc.

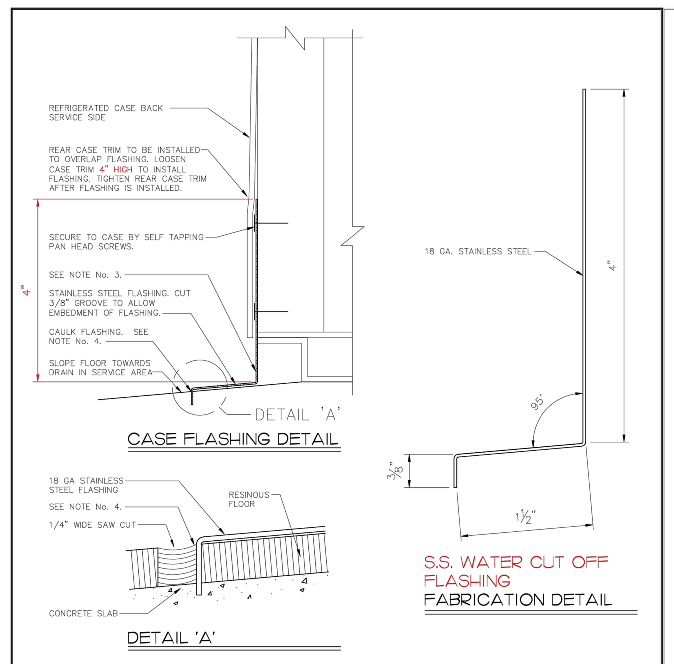


NOTES:

1. FOR CASES THAT DO NOT HAVE A REMOVABLE REAR CASE TRIM, ATTACH THE FLASHING TO THE BACK OF THE CASE AND CAULK ALONG THE TOP.
2. CUT 1/4" WIDE GROOVE FOR FLASHING PARALLEL TO THE REAR OF CASES TO ENSURE PROPER INSTALLATION.
3. WHERE FLASHING PIECES BUTT TOGETHER CAULK JOINT WITH SILVER SILICONE ENTIRE LENGTH OF JOINT EXPOSED.
4. CAULK JOINT WHERE FLASHING SETS IN RESINOUS FLOOR JOINT WITH POLYUREA CAULK TO MATCH FLOOR COLOR.

STAINLESS STEEL WATER CUT OFF FLASHING — MASTER INSTALLATION DETAIL — GISD-14
DATE: 7/14/15 SCALE: NONE DRAWN: ZAW/TMW
ORIGINAL ISSUE DATE 10/11/12

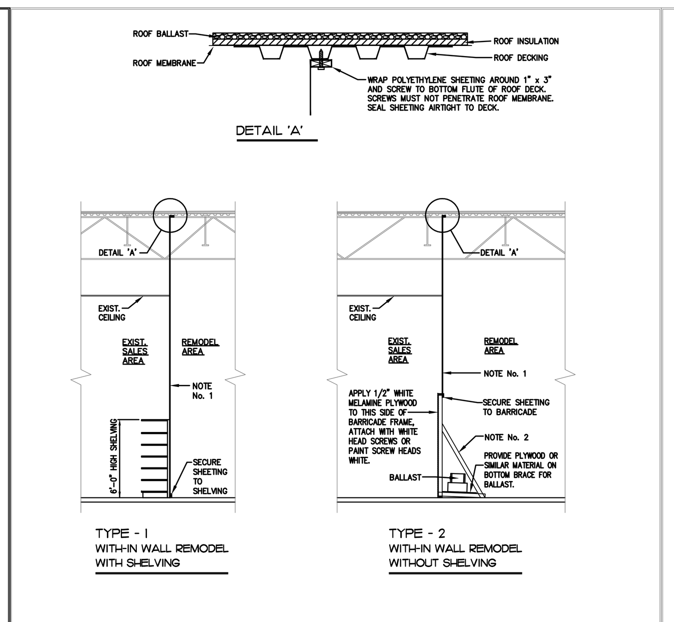


NOTES:

1. 6 MIL FIRE RETARDANT (NFPA 701) POLYETHYLENE SHEETING DUST BARRIER -- USE WHITE, CLEAR OR FROSTED/TRANSLUCENT SHEETING ONLY, BLACK SHEETING IS NOT ACCEPTABLE. WHITE TAPE FULL LENGTH OF JOINT, SECURELY ATTACH TO EITHER BACK OF SHELVING OR 2" x 4" WOOD BRACE BARRICADE, AND EXTEND UP TO ROOF DECK AS INDICATED.
2. 2" x 4" WOOD BRACED BARRICADE 8'-0" HIGH, PROVIDE BALLAST ON BOTTOM BRACE TO SECURE BARRICADE IN PLACE, DO NOT NAIL TO FLOOR, (BALLAST -- i.e. - CONCRETE BLOCKS, SANDBAGS or MISCELLANEOUS CONSTRUCTION MATERIALS). BALLAST & KICKERS SHALL BE ON THE WORK AREA SIDE AND NOT ON THE CUSTOMER ACCESS SIDE.
3. ANY PORTION OF THE SPRINKLER SYSTEM WHICH BECOMES EXPOSED TO POSSIBLE FREEZING TEMPERATURES MUST BE PROTECTED FROM FREEZING WITH HEAT TAPE & INSULATION.

TEMPORARY CONSTRUCTION BARRIERS — MASTER SPECIFICATION DETAIL — ASD-162A
DATE: 7/31/19 SCALE: NONE DRAWN: DS/JQ/ZW
ORIGINAL ISSUE DATE 6/1/07

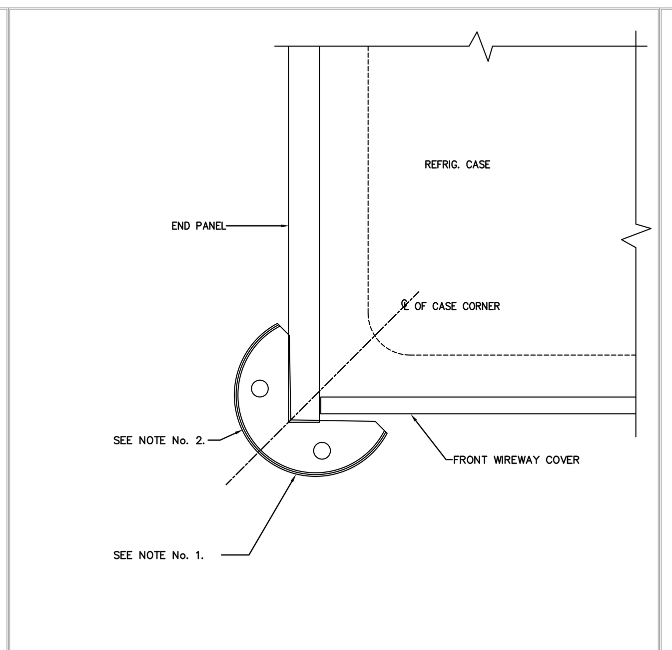


NOTES:

1. DESIGNED FOR USE WITH GLASS DOOR END CASES. CASE CORNER GUARD. REFER TO SECTION 11 41 13 PARAGRAPH 2.2 B GENERAL STORE FIXTURE INSTALLATION IN SPECIFICATIONS. REFER TO FIXTURE PLAN FOR QUANTITY AND LOCATIONS.
2. CASE CORNER GUARD TO BE INSTALLED, AFTER CASE HAS BEEN SET. INSTALL CASE GUARD AS CLOSE TO CASE AS POSSIBLE PER MANUFACTURER'S INSTALLATION INSTRUCTIONS.

Note:
Detail Based On Installation Instructions From National Cart Co. 5050001.
Legend Number GE63CS. Height 12".

GLASS DOOR END CASE CORNER GUARD — MASTER SPECIFICATION DETAIL — ASD-160A
DATE: 6/5/15 SCALE: NONE DRAWN: ZAW
ORIGINAL ISSUE DATE 6/5/15

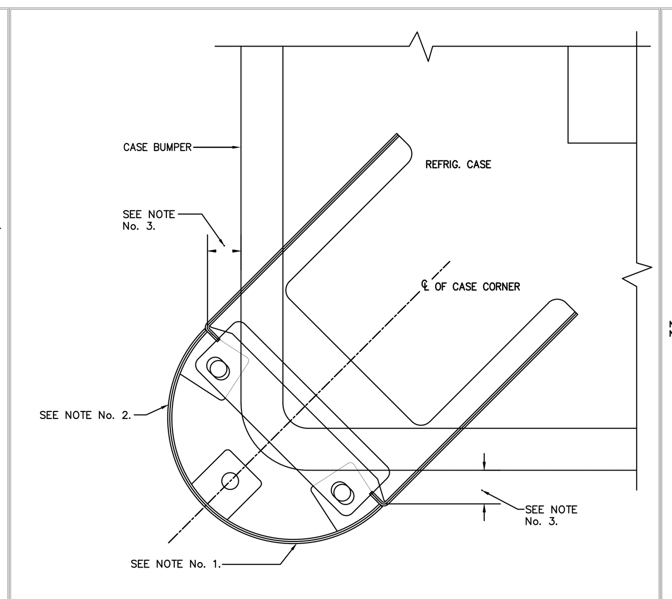


NOTES:

1. DESIGNED FOR USE WITH ISLAND REFRIGERATED CASES (WITH STRAIGHT FRONTS) IN DAIRY, MEAT, SEAFOOD AND DELI DEPARTMENTS. CASE CORNER GUARD. REFER TO SECTION 11 41 13 PARAGRAPH 2.2 B GENERAL STORE FIXTURE INSTALLATION IN SPECIFICATIONS. REFER TO FIXTURE PLAN FOR QUANTITY AND LOCATIONS.
2. CASE CORNER GUARD TO BE INSTALLED, AFTER CASE HAS BEEN SET. INSTALL CASE GUARD (AND FLANGE EXTENSION) AS CLOSE TO CASE AS POSSIBLE PER MANUFACTURER'S INSTALLATION INSTRUCTIONS.
3. MAXIMUM 1" PER MANUFACTURER'S INSTALLATION INSTRUCTIONS.
4. FOR CASES WITH SHALLOW TOE KICK IT MAY BE NECESSARY TO FIELD CUT FLANGE FOR PROPER POSITIONING OF GUARD.

Note:
Detail Based On Installation From National Cart Co. A5050009 (5050009 And 5050010).

REFRIGERATED CASE CORNER GUARD — MASTER SPECIFICATION DETAIL — ASD-160
DATE: 6/5/15 SCALE: NONE DRAWN: ZAW
ORIGINAL ISSUE DATE 7/6/06

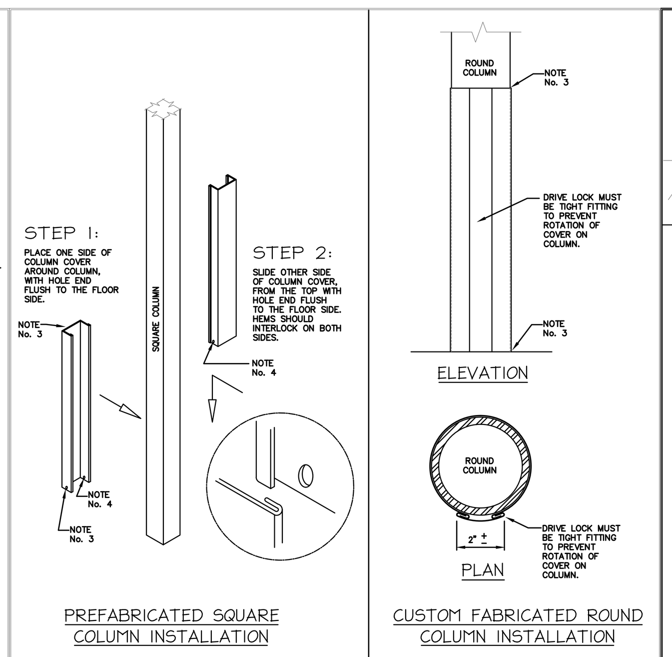


NOTES:

1. SQUARE COLUMN COVERS ARE PREFABRICATED OWNER SUPPLIED AND CONTRACTOR INSTALLED. BECAUSE ROUND COLUMNS CAN VARY SO MUCH IN SIZE THEY ARE TO BE CONTRACTOR FABRICATED AND INSTALLED FROM OWNER SUPPLIED 48" x 108" SHEETS OF FINISHED STEEL. REFER TO DIVISION 01 FOR COLOR AND FINISH.
2. ALL COLUMN COVERS TO BE 4'-0" HIGH, OR MATCH HEIGHT OF EXISTING WRAPPED COLUMNS.
3. AFTER COVERS HAVE BEEN INSTALLED CONTRACTOR TO CAULK A CONTINUOUS BEAD OF CLEAR PAINTABLE SILICONE SEALANT AROUND TOP AND BOTTOM OF COVERS TO SECURE IN PLACE.
4. HOLES ON THE COLUMN COVERS ARE FROM THE MANUFACTURER USED FOR PAINTING PURPOSES. COLUMN COVERS SHOULD BE INSTALLED WITH THE HOLES DOWNWARDS TOWARDS THE FLOOR.

SALES AREA COLUMN COVERS — MASTER SPECIFICATION DETAIL — ASD-157
DATE: 11/15/17 SCALE: NONE DRAWN: ZAW
ORIGINAL ISSUE DATE 7/15/08

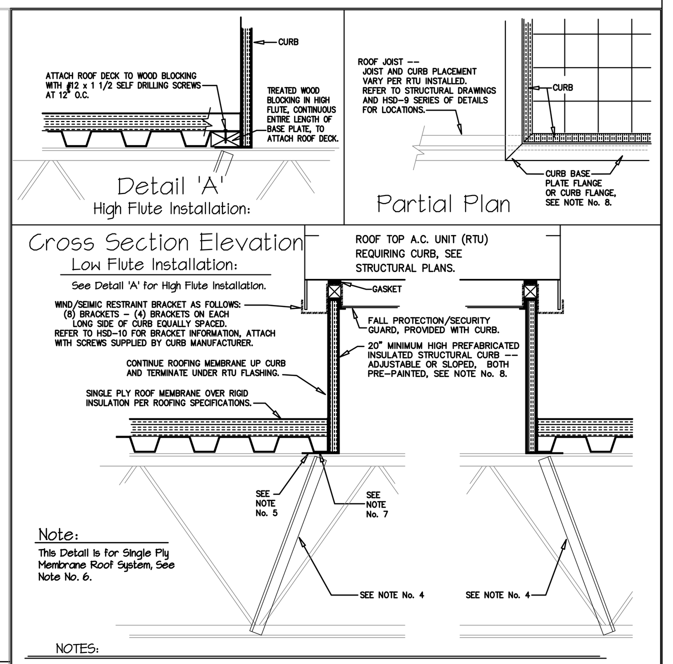


NOTES:

1. SEE KROGER STANDARD SPECIFICATIONS FOR ADDITIONAL INFORMATION.
2. SUPPLY AIR & RETURN AIR OPENINGS IN CURB VARY, REFER TO HSD-9 SERIES OF DETAILS FOR CURB PLACEMENT PER CABINET SIZE.
3. SEE KROGER STANDARD SPECIFICATIONS AND DETAILS HSD-1 & HSD-3 FOR ADDITIONAL INFORMATION.
4. WHERE CURB CROSSES JOISTS AT A LOCATION GREATER THAN 4" FROM A PANEL POINT, PROVIDE ADDITIONAL ANGLE PER "TYPICAL SUPPORT OF CONCENTRATED LOADS NOT AT JOIST PANEL POINTS.
5. ALTERNATIVELY FASTEN CURBS TO SUPPORTING STEEL STRUCTURE USING #12 INTERCORP SELF DRILLING SCREWS @ 12" O.C. MAX. SPACING ALONG EACH SHORT SIDE AND @ 24" O.C. MAX. SPACING ALONG EACH LONG SIDE.
6. REFERENCE ROOFING DETAILS ASD-65C & ASD-66C FOR ROOF FLASHING.
7. ATTACH ROOF DECK TO CURB BASE PLATE FLANGE, THRU LOW FLUTES, APPROX 12" O.C. ON ALL SIDES.
8. PREFABRICATED CURB COMES IN TWO MODELS -- ADJUSTABLE AND SLOPED BASED ON RTU INSTALLED, AS FOLLOWS:
   ADJUSTABLE CURB - ALL RTU'S EXCEPT 'D' BOX - HSD-9D: TWO PIECES, CURB & CURB BASE PLATE INSTALL CURB INTO BASE PLATE AND LEVEL, ATTACH CURB TO BASE PLATE THRU PRE-PUNCHED HOLE WITH TEK SCREWS SUPPLIED WITH CURB.
   SLOPED CURB - 'D' BOX ONLY: ONE PIECE STRUCTURAL, PRE-SLOPED.
9. NEW STORE CONSTRUCTION TO REMAIN UNPAINTED, PAINT TO MATCH EXISTING FOR EXPANSION REMODELS. TO AVOID PAINT FROM GETTING INSIDE RTU, PROTECT WITH PLASTIC FILM. REMOVE PLASTIC AFTER THE DECK IS PAINTED.

-- INSTALLATION SEQUENCE:
1. SET STRUCTURAL STEEL JOIST.
2. INSTALL PREFABRICATED CURB.
3. INSTALL STEEL DECK.
4. INSTALL INSULATION AND ROOFING.
5. PAINT STRUCTURAL STEEL & DECK TO MATCH EXISTING FOR EXPANSION REMODELS.

PREFABRICATED RTU CURB — MASTER SPECIFICATION DETAIL — ASD-78
DATE: 11/10/16 SCALE: NONE DRAWN: ZAW
ORIGINAL ISSUE DATE 2/20/06

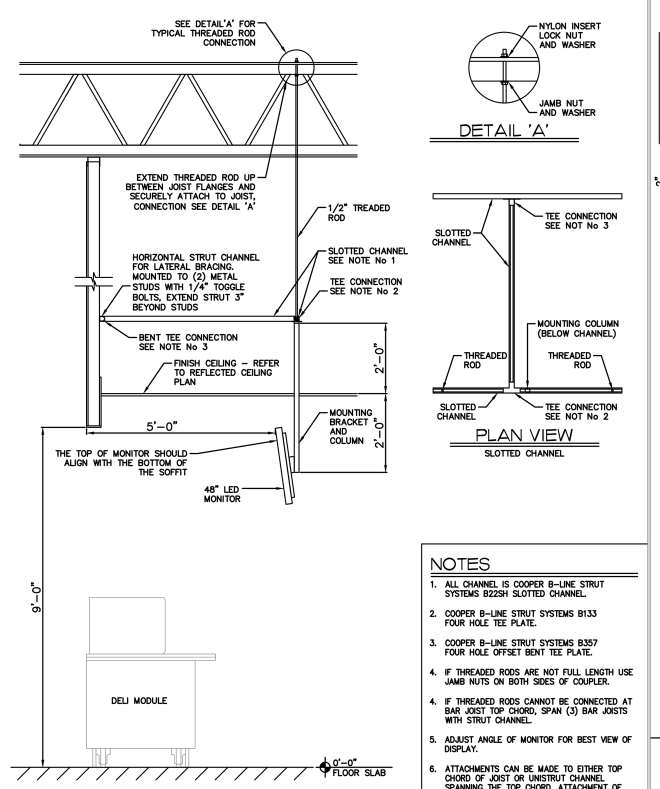


NOTES

1. ALL CHANNEL IS COOPER B-LINE STRUT SYSTEMS B22SH SLOTTED CHANNEL.
2. COOPER B-LINE STRUT SYSTEMS B133 FOUR HOLE TEE PLATE.
3. COOPER B-LINE STRUT SYSTEMS B357 FOUR HOLE OFFSET BENT TEE PLATE.
4. IF THREADED RODS ARE NOT FULL LENGTH USE JAMB NUTS ON BOTH SIDES OF COUPLER.
4. IF THREADED RODS CANNOT BE CONNECTED AT BAR JOIST TOP CHORD, SPAN (3) BAR JOISTS WITH STRUT CHANNEL.
5. ADJUST ANGLE OF MONITOR FOR BEST VIEW OF DISPLAY.
6. ATTACHMENTS CAN BE MADE TO EITHER TOP CHORD OF JOIST OR UNISTRUT CHANNEL SPANNING THE TOP CHORD, ATTACHMENT OF UNISTRUT TO ROOF METAL DECKING WILL NOT BE PERMITTED.

K-0056897 48" MONITOR
K-0053658 MOUNTING KIT

DELI MONITOR MOUNTING — MASTER SPECIFICATION DETAIL — ASD-72
DATE: 9/6/16 SCALE: NONE DRAWN: TMW
ORIGINAL ISSUE DATE 9/6/16

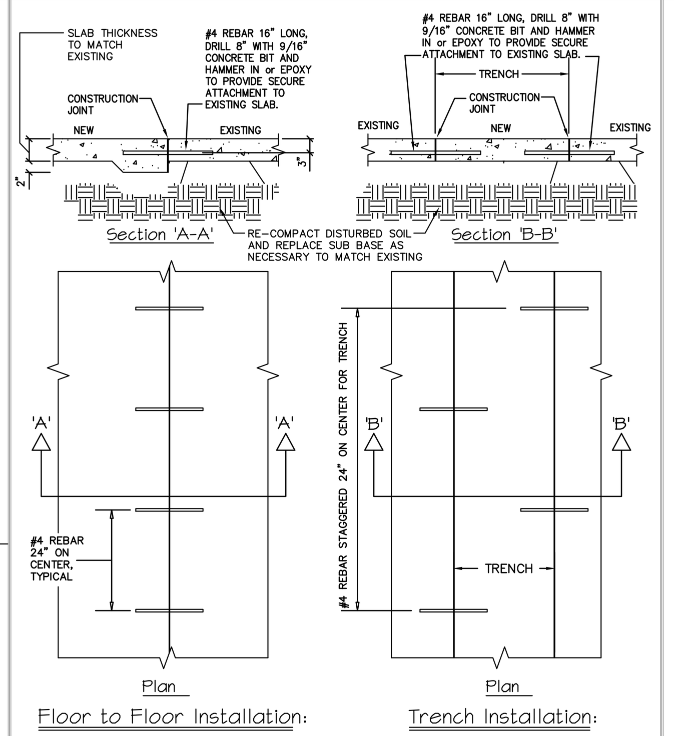


Notes:

IF ANY SIDE OF TRENCH IS 1'-0" or LESS, AWAY FROM CONTROL JOINT or CONSTRUCTION JOINT, SAWCUT AND REMOVE SLAB TO THE JOINT.

DO NOT CROSS CUT.

CONCRETE FLOOR REPLACEMENT AT EXISTING SLAB — MASTER SPECIFICATION DETAIL — ASD-69
DATE: 11/10/11 SCALE: NONE DRAWN: ZAW
ORIGINAL ISSUE DATE 10/1/09

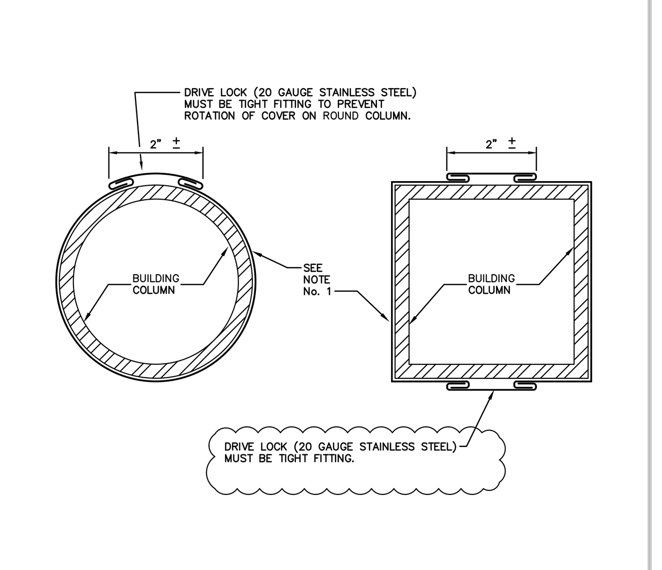


NOTES:

1. WHERE PREP AREA COLUMNS ARE NOT CONCEALED BY SHELVING OR EQUIPMENT, THEY MUST BE WRAPPED WITH 20 GAUGE STAINLESS STEEL.
2. ALL COLUMN COVERS TO BE 4'-0" HIGH, OR MATCH HEIGHT OF EXISTING COLUMNS.
3. CONTRACTOR TO CAULK A CONTINOUS BEAD OF CLEAR SILICONE SEALANT AROUND TOP AND BOTTOM EDGES OF STAINLESS STEEL (AFTER INSTALLATION).

PREP AREA COLUMN COVERS — MASTER SPECIFICATION DETAIL — ASD-63
DATE: 11/15/17 SCALE: NONE DRAWN: ZAW
ORIGINAL ISSUE DATE 2/20/06

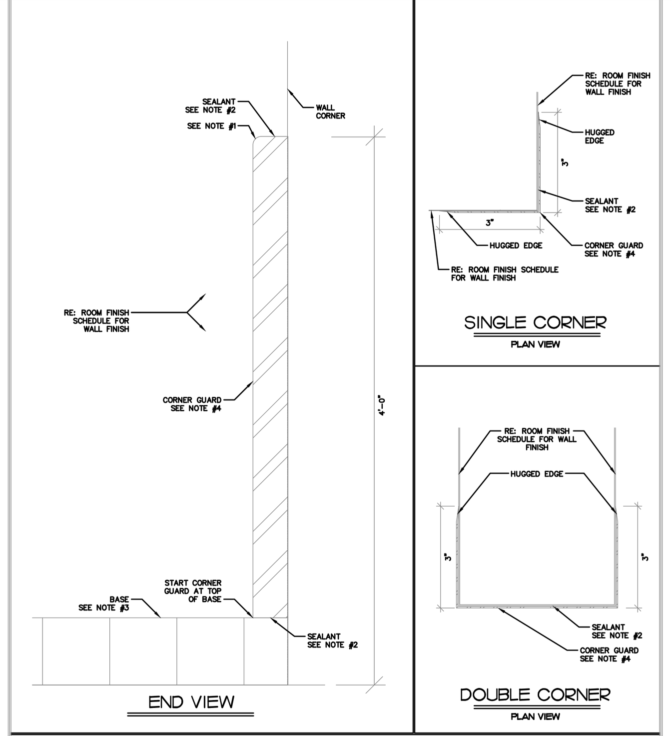


NOTICE:

1. REMOVE ALL SHARP CORNERS.
2. ADHERE STAINLESS STEEL TO WALL WITH CLEAR SILICONE SEALANT, TOP AND BOTTOM.
3. REFERENCE ROOM FINISH SCHEDULE FOR BASE TYPE TO BE USED.
4. 20 GA, 304 STAINLESS STEEL CORNER GUARD.

STAINLESS STEEL CORNER GUARD — MASTER SPECIFICATION DETAIL — ASD-55A
DATE: 7/29/13 SCALE: NONE DRAWN: TMW
ORIGINAL ISSUE DATE 7/29/13

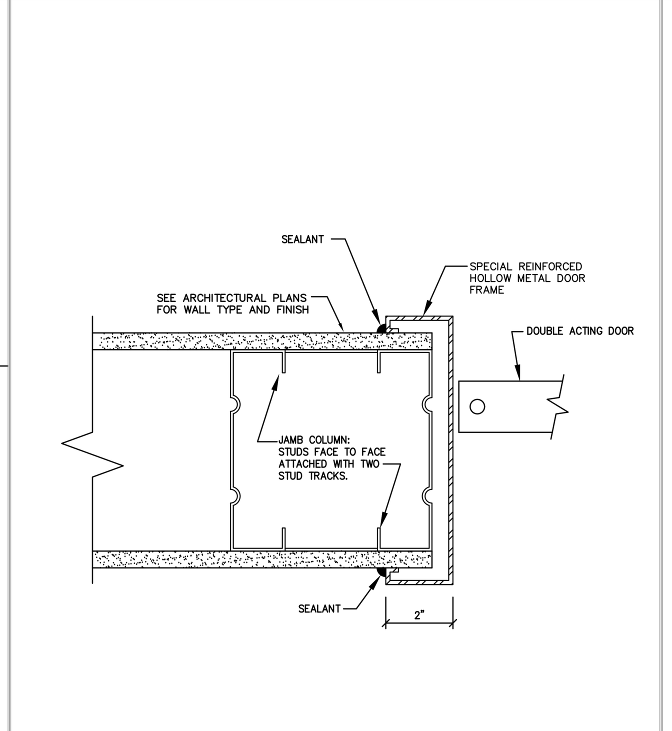


DOUBLE ACTING DOOR FRAME AT STUD PARTITION — MASTER SPECIFICATION DETAIL — ASD-56
DATE: 8/7/13 SCALE: NONE DRAWN: ZAW
ORIGINAL ISSUE DATE 6/18/09

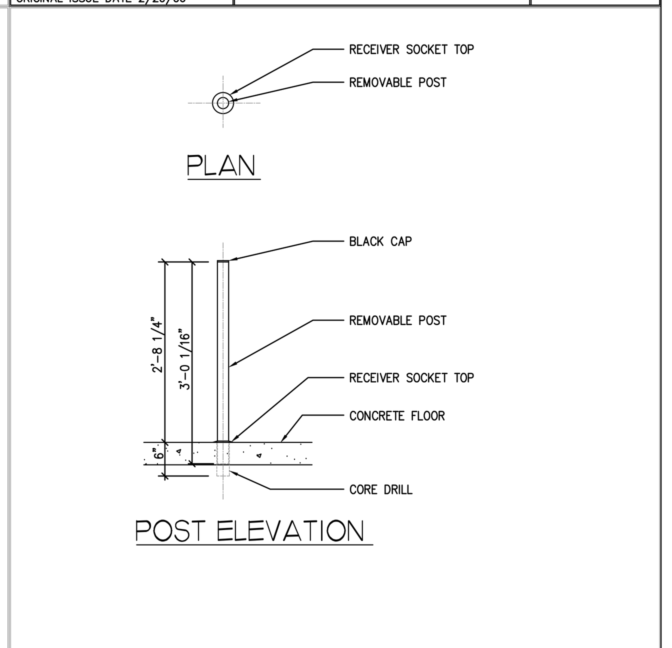


INSTALLATION INSTRUCTIONS:

1. CORE DRILL 2 1/4" DIAMETER HOLE, 4" MIN. DEEP. DEPENDING UPON THE SIZE OF THE CORE DRILLED HOLE, POUR A SMALL AMOUNT OF EPOXY IN THE HOLE, THEN INSERT SOCKET, FILLING IN WITH EPOXY AS NEEDED. INSERT POST IN TO SOCKET AND PROP UP IN VERTICAL POSITION UNTIL EPOXY SETS. IF A LARGER DIAMETER HOLE IS MADE (MAXIMUM 3") POUR STONE MAY BE USED TO SECURE SOCKET IN PLACE

Note:
Installation Instructions From National Cart Co. For NATIONAL CART 5050004 REMOVABLE POST.

REMOVABLE PROTECTIVE POST INSTALLATION — MASTER SPECIFICATION DETAIL — ASD-19
DATE: 5/24/16 SCALE: NONE DRAWN: ZAW
ORIGINAL ISSUE DATE 5/24/16

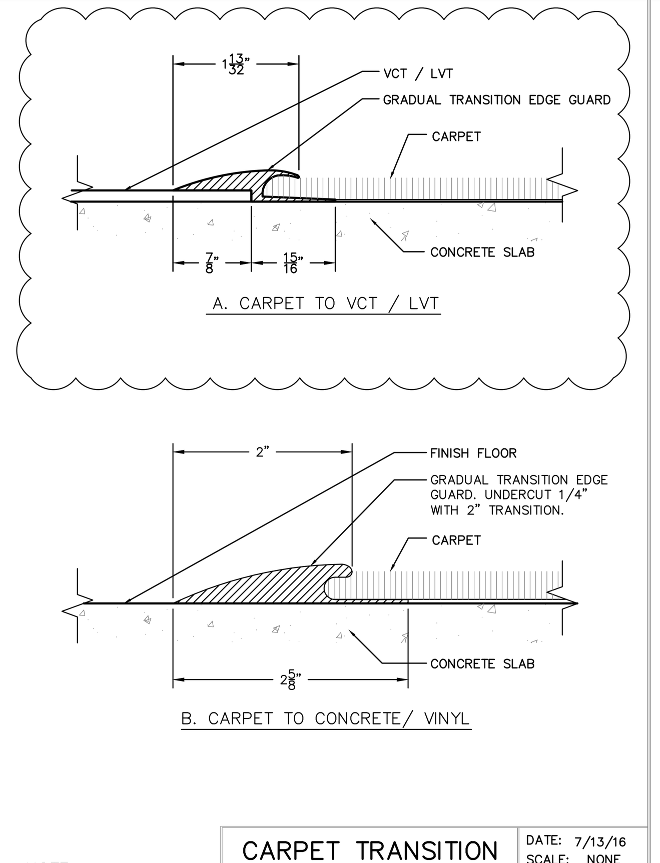


NOTE:
REFER TO SPECIFICATIONS SECTION 09 65 13.

CARPET TRANSITION DETAILS — MASTER SPECIFICATION DETAIL — ASD-4E
DATE: 7/13/16 SCALE: NONE DRAWN: ZAW
ORIGINAL ISSUE DATE 7/29/13

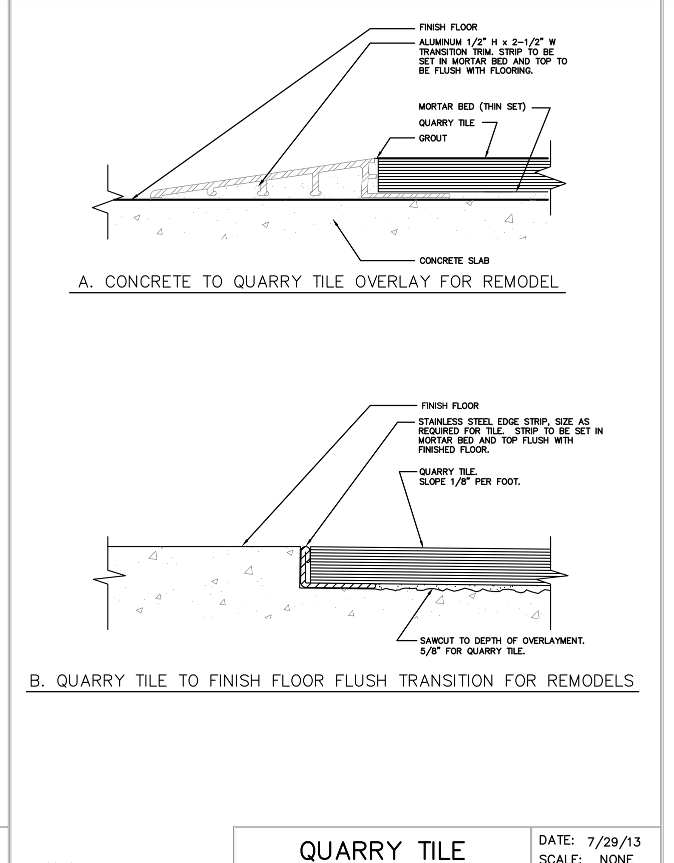


Note:
REFER TO SPECIFICATIONS FOR PRODUCTS.

QUARRY TILE TRANSITION DETAILS — MASTER SPECIFICATION DETAIL — ASD-4D
DATE: 7/29/13 SCALE: NONE DRAWN: ZAW
ORIGINAL ISSUE DATE 11/10/11

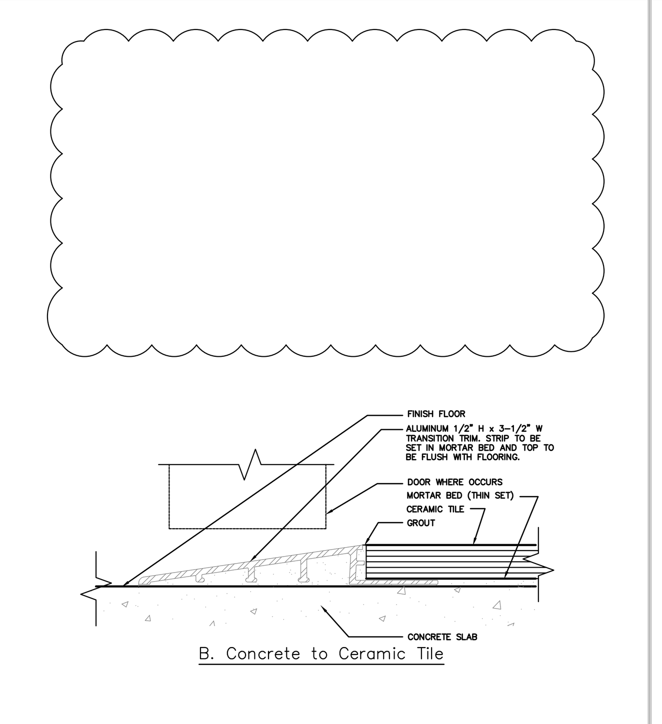


Note:
REFER TO SPECIFICATIONS FOR PRODUCTS.

TILE TRANSITION DETAILS — MASTER SPECIFICATION DETAIL — ASD-4C
DATE: 9/10/15 SCALE: NONE DRAWN: ZAW
ORIGINAL ISSUE DATE 11/10/11

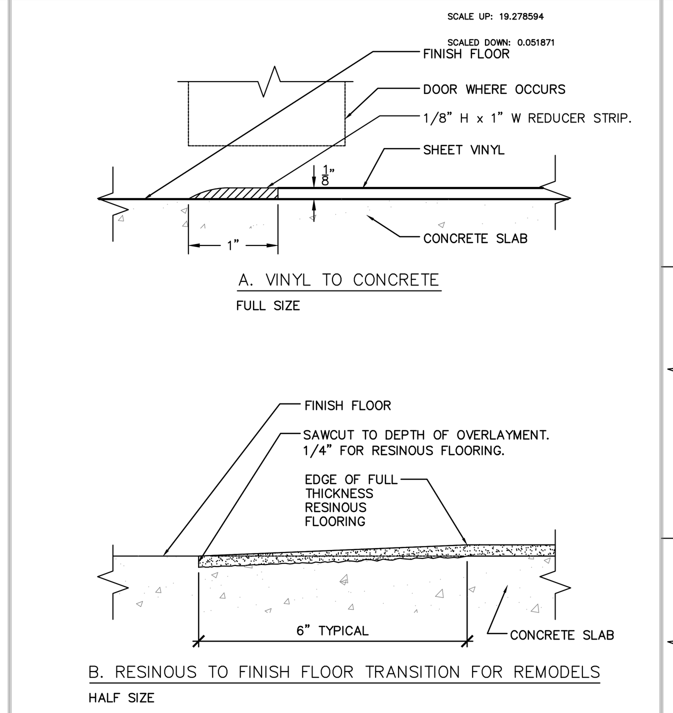


NOTE:
REFER TO SPECIFICATIONS SECTION 09 65 13.

TRANSITION DETAILS — MASTER SPECIFICATION DETAIL — ASD-4B
DATE: 7/13/16 SCALE: NONE DRAWN: ZAW
ORIGINAL ISSUE DATE 11/10/11

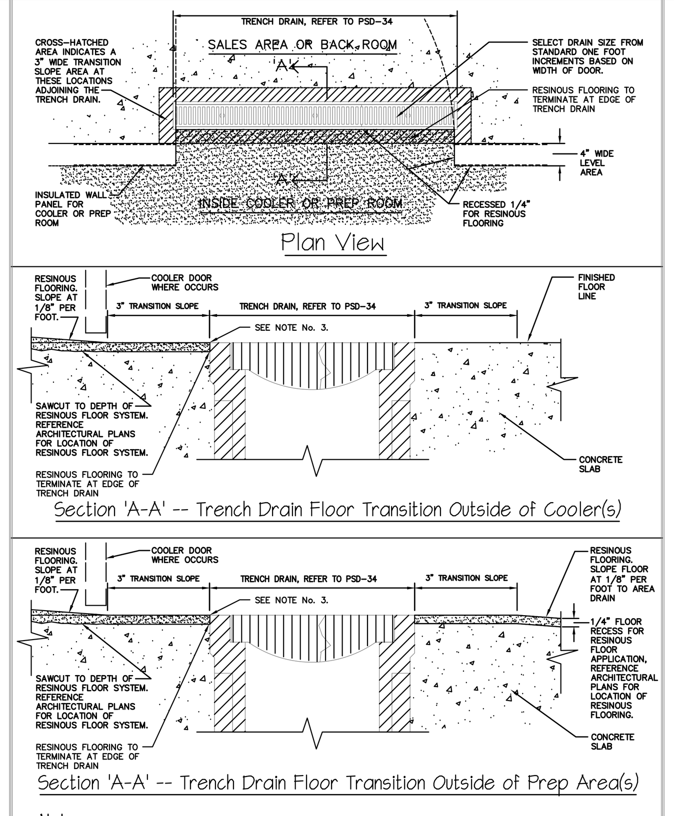


Note:
1. Reference Architectural Plans for Extent of Resinous Flooring.
2. Refer to Specifications for Products.
3. Top of 1/4" thick resinous material even with rim of drain (Typical).

RESINOUS FLOORING TRANSITIONS — MASTER SPECIFICATION DETAIL — ASD-4A
DATE: 11/23/15 SCALE: NONE DRAWN: ZAW
ORIGINAL ISSUE DATE 1/11/11

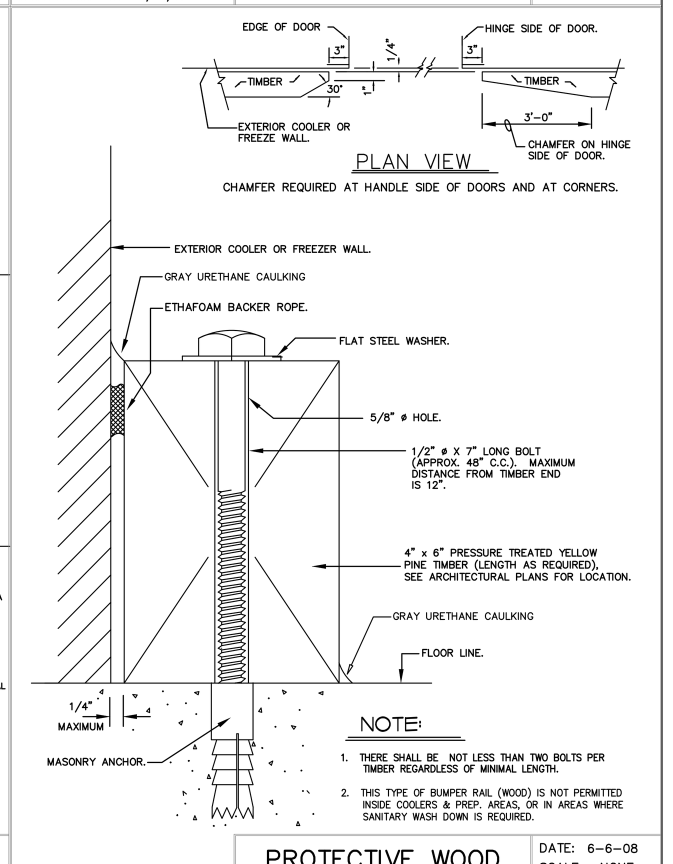


NOTE:

1. THERE SHALL BE NOT LESS THAN TWO BOLTS PER TIMBER REGARDLESS OF MINIMAL LENGTH.
2. THIS TYPE OF BUMPER RAIL (WOOD) IS NOT PERMITTED INSIDE COOLERS & PREP. AREAS, OR IN AREAS WHERE SANITARY WASH DOWN IS REQUIRED.

PROTECTIVE WOOD BUMPER RAIL — MASTER SPECIFICATION DETAIL — ASD-2
DATE: 6-6-08 SCALE: NONE DRAWN: JFQ

## General Walltype Notes

1. DEFLECTION TRACK TO BE USED AT BOTTOM OF JOISTS. CONSISTS OF 3" LONG LEG TO PROVIDE 1-1/2" OF VERTICAL MOVEMENT. DO NOT ATTACH METAL STUD WALL OR GYPSUM BOARD TO DEFLECTION TRACK. HOLD GYPSUM BOARD SHORT OF DECK BY 1-1/2".
2. GYPSUM BOARD: TYPICAL 1/2" GYP. BOARD USED UNLESS NOTED OTHERWISE. REMODEL PROJECTS USE 5/8" GYPSUM BOARD WHERE EXISTING 5/8" GYPSUM BOARD IS IN PLACE.
3. MOISTURE RESISTANT GYPSUM BOARD: 1/2" THICK UNLESS NOTED OTHERWISE.
4. CEMENT BOARD: 1/2" UNLESS NOTED OTHERWISE.
5. METAL STUDS: STANDARD DEPTH TO BE 3 5/8" UNLESS NOTED OTHERWISE. REFER TO DETAILS FOR BRACING AND GAGE.
6. BRACING AT COOLER/FREEZER: FULL HEIGHT WALLS BUILT ALONG COOLER/FREEZER PANELS SHOULD BE BRACED AT ROOF PANEL TO UTILIZE STANDARD DEPTH METAL STUD.
7. GYPSUM BOARD AT PHARMACY GRILLE: INSTALL GYPSUM BOARD AS FAR AS POSSIBLE IN POCKET WALL FOR PHARMACY GRILLE, CONSIDER WHICH SIDE WILL BE VIEWED MOST BY CUSTOMERS WHEN INSTALLING GYPSUM BOARD.
8. FLOOR FINISH AND BASE: REFER TO INTERIOR DECOR PLANS & ROOM FINISH SCHEDULE. FOR WALL FINISHES REFER TO SPECIFICATION SECTIONS 1 AND 9.
9. FINISHED CEILINGS: EXTEND GYP. BD. 6" ABOVE CEILING, METAL STUDS DO NOT NEED TO EXTEND TO DECK (U.N.O.) IF BRACED BACK TO STRUCTURE ABOVE AT 48" O.C. MAX.
10. OSB WOOD PANEL ALLOWED FOR 5B CONSTRUCTION. USE FRT WOOD PANEL FOR 2B NONCOMBUSTIBLE CONSTRUCTION.
11. ALL PARTITION WITH RECESSED ELECTRIC PANELS AND TOILET SHALL BE 6" STUD.
12. ALL PARTIAL HEIGHT WALLS IN SUSHI AND CHEESE SHOP LOCATIONS TO BE 48" AFF. OUTLETS FOR COUNTERTOP EQUIPMENT ARE TO BE INSTALLED ALONG WALLS ARE TO BE INSTALLED ABOVE TABLE SPALSH

| # | Date | Change Description |
|---|---|---|
| | | |
| | | |
| | | |
| | | |
| | | |

KROGER N273
WORTHINGTON
60 WORTHINGTON MALL
WORTHINGTON, OH 43085
for
THE KROGER COMPANY

MOODY•NOLAN
300 Spruce Street
Suite 300
Columbus, Ohio 43215
Phone: (614) 461-4664
Fax: (614) 280-8881
www.moodynolan.com

Dwg. Coord.: NLF  Tech. Coord.:  Proj #: 19393

DETAILS and INTERIOR WALLTYPES — A5.2

95% OWNER REVIEW — 10/29/2019

PLOTTED BY: $USER$  $DATE$  $TIME$  $FILE$