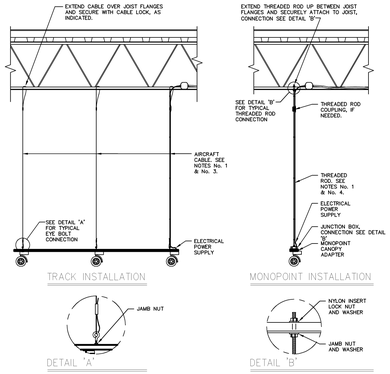

NOTES:

1. THIS DETAIL IS ASSOCIATED WITH THE INSTALLATION OF TR15, TR16, TR17, TR18 AND TR19 LED TRACK LIGHT FIXTURES. HANG ELECTRIFIED TRACK FOR MULTIPLE FIXTURES WITH AIRCRAFT CABLE AND THREADED ROD FOR MONOPOINT FIXTURE CONNECTION. THREADED ROD SHOULD BE USED TO SUPPORT ELECTRIFIED TRACK AT LOCATIONS WHERE HVAC DIFFUSERS CAN CAUSE TRACK TO SWAY.
2. FIXTURE SUPPORT AND POWER CONNECTION FURNISHED AND INSTALLED BY THE ELECTRICAL CONTRACTOR AS REQUIRED BY GOVERNING CODES.
3. INSTALL ELECTRIFIED TRACK WITH MIN 1/16" DIAMETER STANDARD STEEL WIRE ROPE OR STAINLESS STEEL AIRCRAFT CABLE WITH CABLE LOCK CONNECTED TO 1/4" EYE BOLT THRU FACTORY DRILLED HOLES WITH LOCK NUT WITH NYLON INSERT ON BOTTOM AND STANDARD JAMB NUT ON TOP OF THE TRACK. 4" TRACK TO BE INSTALLED BY 2 POINTS OF ATTACHMENT, 8' BY 3 POINTS AND 12' BY 4 POINTS.
4. MONOPOINT FIXTURE TO BE HUNG BY 1/4" THREADED ROD ATTACHED TO STEEL AND JUNCTION BOX, FOR LONGER DROPS INSTALL THREADED COUPLING AS HIGH AS POSSIBLE. ATTACH TO BOTTOM CHORD OF JOIST BY EXTENDING THREADED ROD BETWEEN JOIST FLANGES AND HOLE IN JUNCTION BOX BY ATTACHING WITH LOCK NUT WITH NYLON INSERT ON TOP AND STANDARD JAMB NUT & WASHER ON BOTTOM.
5. WHERE MOUNTING CABLE OR THREADED ROD MISSES EXISTING STRUCTURAL STEEL, PROVIDE & SECURELY ATTACH METAL SUPPORT BETWEEN STEEL USING STEEL CHANNEL 7/8" MIN, 1" x 1" ANGLE IRON OR 3/4" MC OR RIGID CONDUIT.
6. LIGHT TRACK LENGTH AND HEIGHT ABOVE FLOOR VARIES PER LOCATION. REFER TO LIGHTING PLAN FOR MOUNTING HEIGHT AND LOCATIONS.

LED TRACK LIGHT & MONOPOINT DETAIL	DATE: 11/5/13 SCALE: NONE DRAWN: ZAW
ORIGINAL ISSUE DATE 11/2/12 — MASTER SPECIFICATION DETAIL	ESD-50

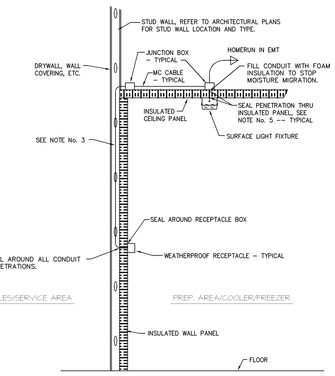

NOTES:

1. EXPOSED SURFACE MOUNTED CONDUITS WILL NOT BE PERMITTED IN ANY PREP. ROOMS, COOLERS OR FREEZERS.
2. ALL CONDUITS TO STAB THRU PREFABRICATED INSULATED PANEL TO COVERED IN-USE WEATHERPROOF RECEPTACLE WITHIN.
3. MC CABLE PERMITTED IN WALL CAVITY THAT IS ACCESSIBLE FOR FUTURE REWORK OF RECEPTACLES, INSTALL WIRING IN ACCORDANCE WITH SPEC. SECTION 26 05 19. EMT TO BE USED IN ALL WALLS WHERE INACCESSIBLE IN FUTURE AND WITHOUT STUD WALL. SURFACE MOUNTED CONDUIT ON PREFAB PANELS EXPOSED IN BACK ROOM PROTECTED BY CONCRETE CURB.
4. LIGHTING ELECTRICAL FEED THRU TOP CONNECTION OF END FIXTURE THEN THRU END CONNECTION POINT OF THE REMAINING LIGHT FIXTURES IN CONTINUOUS ROW. REPEAT AS REQUIRED BY EACH ADDITIONAL LIGHT FIXTURE OR LIGHT FIXTURE ROW.
5. SEAL AROUND ALL RECEPTACLES AND ALL ELECTRICAL PENETRATIONS THRU INSULATED PANELS WITH CLEAR SILICONE CAULK. SEAL ON BOTH SIDES.

CONDUIT INSTALL. FOR AREAS WITH PREFAB. INSULATED PANEL CEILING	DATE: 7/29/14 SCALE: NONE DRAWN: ZAW
ORIGINAL ISSUE DATE 10/1/09 — MASTER SPECIFICATION DETAIL	ESD-26

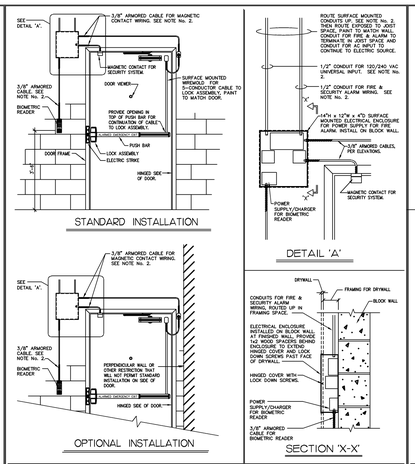

NOTICE:

1. ALARM SYSTEM INDICATED IS BASED ON "VON DUPRIN CX96/99 CHEKIT" WITH DELAYED EGRESS PANIC LOCK, DELAYED EGRESS FEATURE MAY BE DEACTIVATED IF NOT NEEDED.
2. WIRING CONCEALED IN WALL FRAMING IN FINISHED AREAS OR PAINTED TO MATCH DECOR WHERE EXPOSED.
3. CONTRACTOR SUPPLIED ITEMS: 1/2 CONDUIT, 3/8" ARMORED CABLE, 7/8" x 7/16" WIREWOLD (AVIORAC or EQUAL), AND MISC. INSTALLATION HARDWARE.
4. OWNER PROVIDED HARDWARE: DOOR HARDWARE, CONTROL PANEL, BIO READER AND MAGNETIC CONTACTS.

EMPLOYEE ENTRY, EXIT WITH DELAYED EGRESS	DATE: 1/21/14 SCALE: NONE DRAWN: ZAW
ORIGINAL ISSUE DATE 3/13/12 — MASTER SPECIFICATION DETAIL	ESD-22B

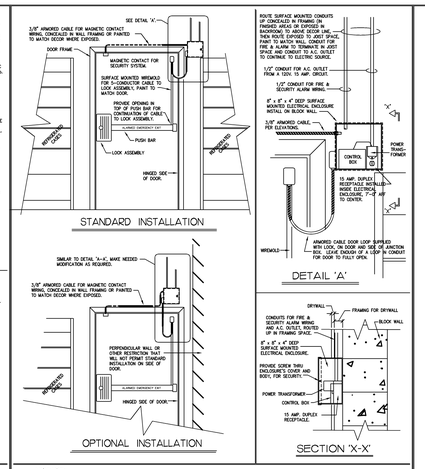

Note:
Refer to ESD-22A for Double Door Installation.

NOTICE:

1. ALARM SYSTEM INDICATES IS BASE ON "ALARM LOCK PUSH BAR MODEL 715" WITH DELAYED EGRESS PANIC LOCK, DELAYED EGRESS FEATURE MAY BE DEACTIVATED IF NOT NEEDED.
2. CONTRACTOR SUPPLIED ITEMS: 1/2 CONDUIT, 3/8" ARMORED CABLE, HARDWARE, 7/8" x 7/16" WIREWOLD (AVIORAC or EQUAL), 4" x 2" x 1 1/2" MAXIMUM HANDY BOXES (RACO 850 or EQUAL) 15 AMP DUPLEX RECEPTACLE AND HANDY BOX DUPLEX PLATE.

ALARMED EMERGENCY SINGLE EXIT DOOR	DATE: 4/1/10 SCALE: NONE DRAWN: JFQ
ORIGINAL ISSUE DATE 7/6/06 — MASTER SPECIFICATION DETAIL	ESD-22

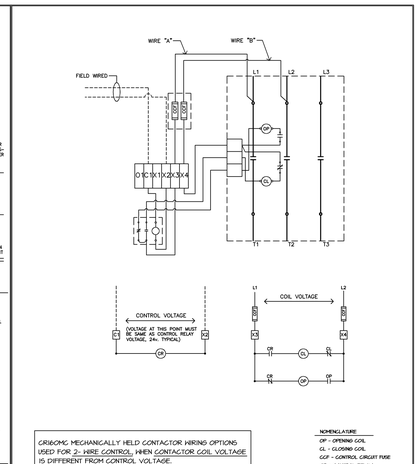

GREEN= MECHANICALLY HELD CONTACTOR WIRING OPTIONS USED FOR 2- WIRE CONTROL, WHEN CONTACTOR COIL VOLTAGE IS DIFFERENT FROM CONTROL VOLTAGE.

NOMENCLATURE
OP - OPENING COIL
CL - CLOSING COIL
CB - CONTROL CIRCUIT FUSE
CR - CONTROL RELAY
* - WHEN ORDERED

Note:
REFER TO THE NATIONAL ELECTRIC CODE OR LOCAL ELECTRIC CODE AS REQUIRED.

LIGHTING CONTACTOR WIRING DIAGRAM	DATE: 7/8/10 SCALE: NONE DRAWN: JQ
ORIGINAL ISSUE DATE 7/8/10 — MASTER SPECIFICATION DETAIL	ESD-13

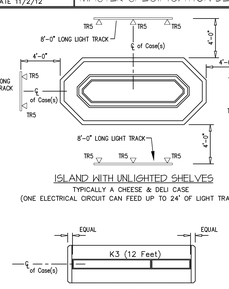

ISLAND WITH UNLIGHTED SHELVES

NOTE:
THE USE OF TRACK LIGHTING IS INTENDED TO HIGHLIGHT INDIVIDUAL AREAS, AND IS NOT INTENDED TO PROVIDE UNIFORM LIGHT LEVELS.

TYPICALLY A CHEESE & DELI CASE
(ONE ELECTRICAL CIRCUIT CAN FEED UP TO 24' OF LIGHT TRACK)

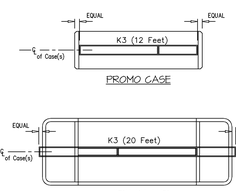

PROMO CASE

WIDE ISLAND

NOTICES:
LIGHT FIXTURE ROWS & TRACK LIGHTING SHALL BE INSTALLED AFTER THE CASES HAVE BEEN INSTALLED -- TO ASSURE PROPER ALIGNMENT.
REFER TO CURRENT LIGHTING REFERENCE DRAWINGS FOR ADDITIONAL INFORMATION AND CURRENT LIGHTING SPECIFICATIONS.

ISLAND CASE LIGHT PLACEMENT	DATE: 3/23/11 SCALE: NONE DRAWN: ja
ORIGINAL ISSUE DATE 2/20/06 — MASTER SPECIFICATION DETAIL	ESD-47

Notes:

1. US1 -- WATTSTOPPER ULTRASONIC OCCUPANCY SENSOR MODEL UW-200.
2. REFER TO LIGHTING PLAN REFERENCE DRAWINGS FOR LIGHT FIXTURE AND OCCUPANCY SENSOR REQUIREMENTS.

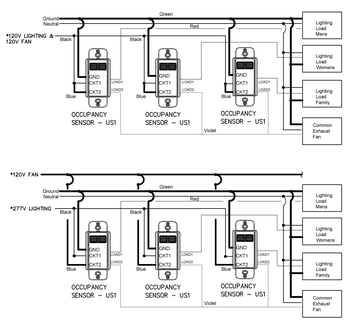

RESTROOM LIGHTING AND EXHAUST FAN CONTROL	DATE: 5/7/14 SCALE: NONE DRAWN: ZAW
ORIGINAL ISSUE DATE 4/1/10 — MASTER SPECIFICATION DETAIL	ESD-25

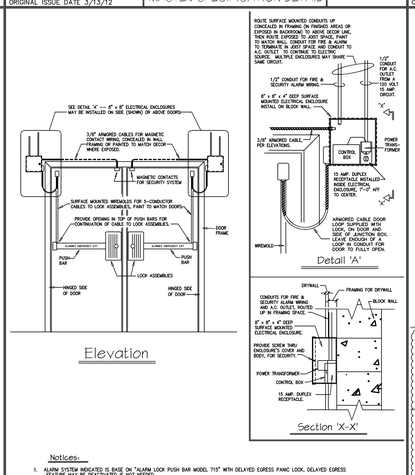

Note:
Refer to ESD-22A for Single Door Installation.

Notes:

1. ALARM SYSTEM INDICATED IS BASE ON "ALARM LOCK PUSH BAR MODEL 715" WITH DELAYED EGRESS PANIC LOCK, DELAYED EGRESS FEATURE MAY BE DEACTIVATED IF NOT NEEDED.
2. CONTRACTOR SUPPLIED ITEMS: 1/2 CONDUITS, 3/8" ARMORED CABLES, HARDWARE, 7/8" x 7/16" WIREWOLD (AVIORAC or EQUAL), 8" x 8" x 4" ELECTRICAL ENCLOSURES (HUBBELL MEDIMARK Cat# A08084 or EQUAL), 4" x 2" x 1 1/2" MAXIMUM HANDY BOXES (RACO 850 or EQUAL) 15 AMP DUPLEX RECEPTACLES AND HANDY BOX DUPLEX PLATE

ALARMED EMERGENCY DOUBLE EXIT DOOR	DATE: 8/8/11 SCALE: NONE DRAWN: ZAW
ORIGINAL ISSUE DATE 4/1/10 — MASTER SPECIFICATION DETAIL	ESD-22A

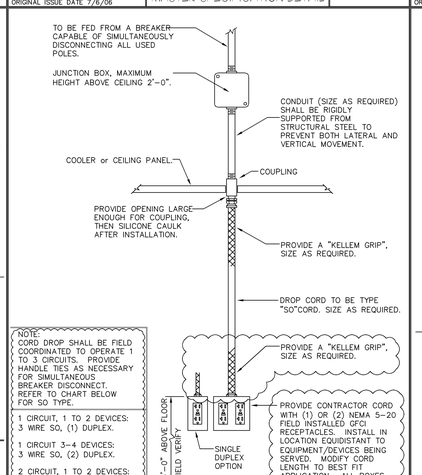

NOTE:
CORD DROP SHALL BE FIELD COORDINATED TO OPERATE 1 TO 3 CIRCUITS. PROVIDE HANDLE TIES AS NECESSARY FOR SIMULTANEOUS BREAKER DISCONNECT. REFER TO CHART BELOW FOR SO TYPE.

1 CIRCUIT, 1 TO 2 DEVICES: 3 WIRE SO, (1) DUPLEX.
1 CIRCUIT 3-4 DEVICES: 3 WIRE SO, (2) DUPLEX.
2 CIRCUIT, 1 TO 2 DEVICES: 4 WIRE SO, (1) DUPLEX WITH TABS CUT.
2 CIRCUIT 3-4 DEVICES: 4 WIRE SO, (2) DUPLEX, EACH TO ONE CIRCUIT.
3 CIRCUIT 3-4 DEVICES: 5 WIRE SO, (2) DUPLEX, (1) WITH TABS CUT.

ELECTRIC DROP CORD DETAIL FOR MULTIPLE OUTLETS	DATE: 5/7/14 SCALE: NONE DRAWN: ZAW
ORIGINAL ISSUE DATE 10/9/13 — MASTER SPECIFICATION DETAIL	ESD-16A

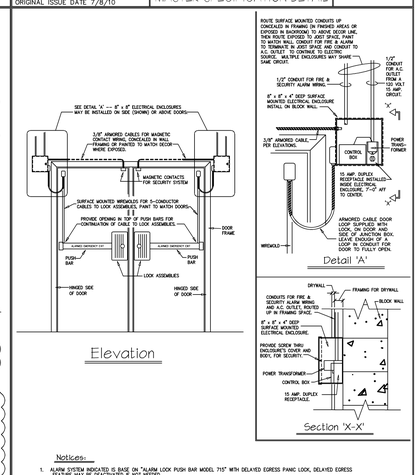

Note:
Refer to ESD-22A for Single Door Installation.

Notes:

1. ALARM SYSTEM INDICATED IS BASE ON "ALARM LOCK PUSH BAR MODEL 715" WITH DELAYED EGRESS PANIC LOCK, DELAYED EGRESS FEATURE MAY BE DEACTIVATED IF NOT NEEDED.
2. CONTRACTOR SUPPLIED ITEMS: 1/2 CONDUITS, 3/8" ARMORED CABLES, HARDWARE, 7/8" x 7/16" WIREWOLD (AVIORAC or EQUAL), 8" x 8" x 4" ELECTRICAL ENCLOSURES (HUBBELL MEDIMARK Cat# A08084 or EQUAL), 4" x 2" x 1 1/2" MAXIMUM HANDY BOXES (RACO 850 or EQUAL) 15 AMP DUPLEX RECEPTACLES AND HANDY BOX DUPLEX PLATE

ALARMED EMERGENCY DOUBLE EXIT DOOR	DATE: 8/8/11 SCALE: NONE DRAWN: ZAW
ORIGINAL ISSUE DATE 4/1/10 — MASTER SPECIFICATION DETAIL	ESD-22A

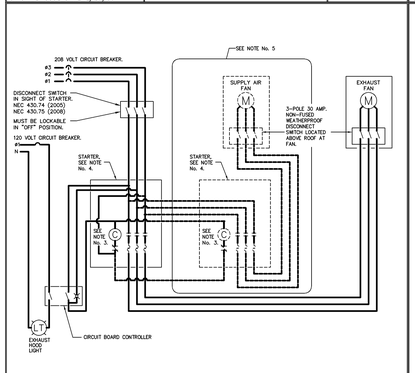

NOTES:

1. BOLD LINES INDICATE FIELD WIRING.
2. CONTROL CIRCUIT WIRING SHALL BE MINIMUM OF No. 12 AWG.
3. COIL SHALL BE ORDERED FOR 208 VOLT.
4. A.C. MAGNETIC STARTER WITH OVERLOAD RELAYS & NEMA TYPE 1 ENCLOSURE. PROJECT DESIGN ENGINEER TO SHOW STARTERS ON ELECTRICAL SINGLE LINE DIAGRAM.
5. DASHED ELEMENTS SHALL BE PROVIDED WHEN SUPPLY AIR FAN IS REQUIRED FOR COMPENSATING HOOD, SEE H.V.A.C. and ELECTRICAL PLANS.
6. WALL SWITCHES TO BE LOCATED TO PROVIDE READY ACCESS. DO NOT LOCATE BEHIND EQUIPMENT THAT WOULD PREVENT VISUAL AND SAFE ACCESS. COORDINATE LOCATIONS WITH PROJECT FIXTURE PLAN.

FAN WIRING DIAGRAM FOR EXHAUST HOODS	DATE: 6/5/15 SCALE: NONE DRAWN: ZAW
ORIGINAL ISSUE DATE 6/6/08 — MASTER SPECIFICATION DETAIL	ESD-35

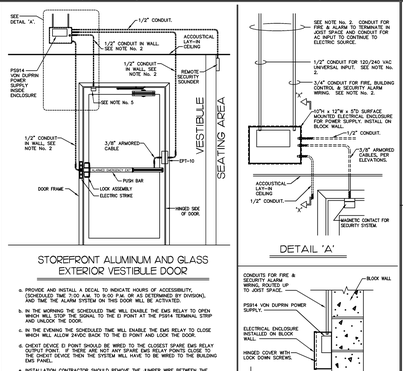

GRAB AND GO ENTRY, WITH DELAYED EGRESS	DATE: 1/14/14 SCALE: NONE DRAWN: TMW
ORIGINAL ISSUE DATE 4/22/13 — MASTER SPECIFICATION DETAIL	ESD-22C

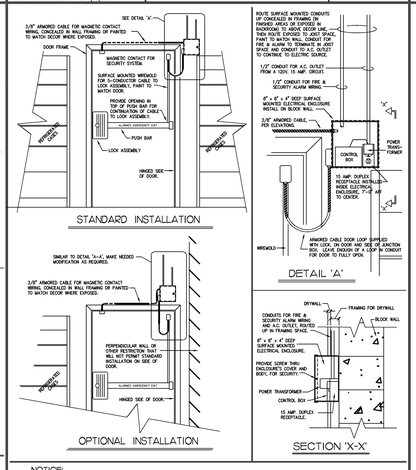

Note:
Refer to ESD-22A for Double Door Installation.

NOTICE:

1. ALARM SYSTEM INDICATES IS BASE ON "ALARM LOCK PUSH BAR MODEL 715" WITH DELAYED EGRESS PANIC LOCK, DELAYED EGRESS FEATURE MAY BE DEACTIVATED IF NOT NEEDED.
2. CONTRACTOR SUPPLIED ITEMS: 1/2 CONDUIT, 3/8" ARMORED CABLE, HARDWARE, 7/8" x 7/16" WIREWOLD (AVIORAC or EQUAL), 8" x 8" x 4" ELECTRICAL ENCLOSURE (HUBBELL MEDIMARK Cat# A08084 or EQUAL), 4" x 2" x 1 1/2" MAXIMUM HANDY BOX (RACO 850 or EQUAL) 15 AMP DUPLEX RECEPTACLE AND HANDY BOX DUPLEX PLATE.

ALARMED EMERGENCY SINGLE EXIT DOOR	DATE: 4/1/10 SCALE: NONE DRAWN: JFQ
ORIGINAL ISSUE DATE 7/6/06 — MASTER SPECIFICATION DETAIL	ESD-22

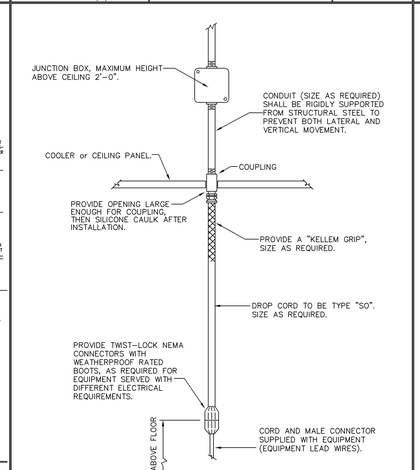

ELECTRIC DROP CORD DETAIL	DATE: 10/9/13 SCALE: NONE DRAWN: ZAW
ORIGINAL ISSUE DATE 2/20/06 — MASTER SPECIFICATION DETAIL	ESD-16

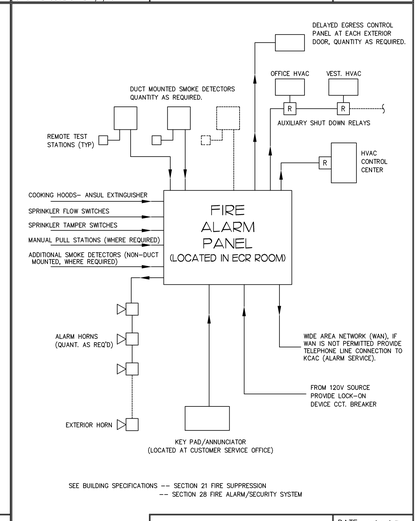

SEE BUILDING SPECIFICATIONS -- SECTION 21 FIRE SUPPRESSION
-- SECTION 28 FIRE ALARM/SECURITY SYSTEM

ALARM SYSTEM SINGLE LINE DIAGRAM	DATE: 1/14/13 SCALE: NONE DRAWN: ZAW
ORIGINAL ISSUE DATE 12/22/80 — MASTER SPECIFICATION DETAIL	ESD-5

issued for: BIDS & PERMITS 06-26-2015
80% OWNER REVIEW 06-22-2015

PROPOSED INTERIOR REMODEL FOR:

Kroger

STORE NO. D-361

425 N. CENTER STREET
NORTHVILLE, MI 48167

THE KROGER CO. OF MICHIGAN

jeffery a. scott architects p.c.
32316 grand river ave. suite 200
farmington, michigan 48336-3261
(248) 476-8800 fax (248) 476-8833

ELECTRICAL STANDARD DETAILS

project no.	sheet no.
15100	E5.1.1

PLOT FULL SIZE = 30"x42"

copyright © 2015