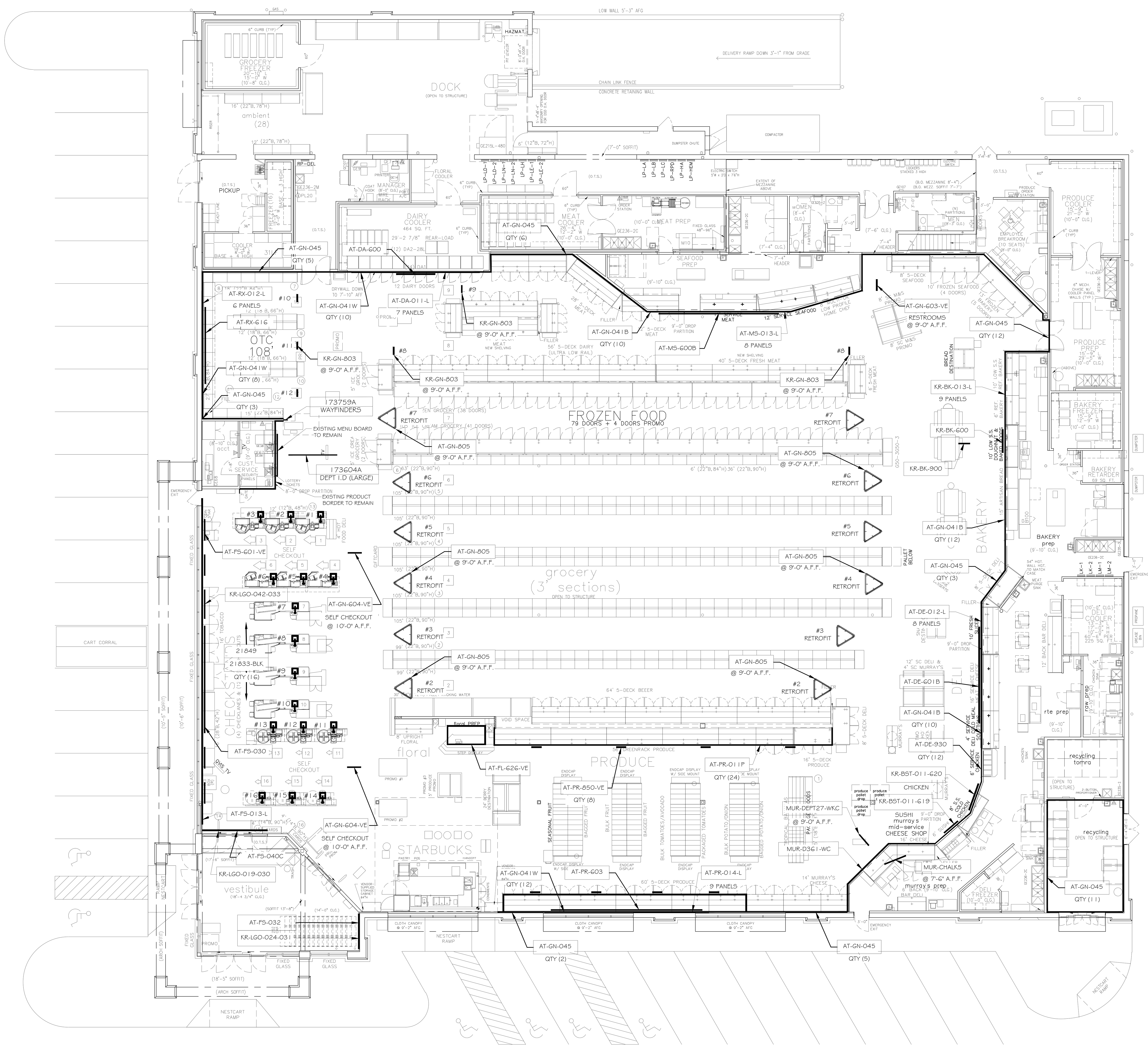

GENERAL NOTES:

- REFERENCE ARCHITECTURAL SPECIFICATIONS FOR ADDITIONAL SUPPLEMENTAL SIGNAGE AND FINISH REQUIREMENTS NOT SHOWN ON DECOR DRAWINGS.

- CONTACT DECOR FABRICATOR WITH QUESTIONS REGARDING PARTS RECEIVED.

- INSTALLERS TO COORDINATE CLEAR HANGING POINTS WITH TRACK LIGHTING.

-ALL EXPOSED STEEL COLUMNS LOCATED ON THE SALES FLOOR WILL NEED TO BE FINISHED WITH PT-730 SW-7067 CITYSCAPE (FOR NEW BUILD STORES). -EXISTING STORES WILL PAINT COLUMNS PT-704 AGREEABLE GREY

- LOCATION OF ALL DECOR TO BE SITE VERIFIED BASED ON MERCHANDISING.

FROZEN AISLE MARKERS

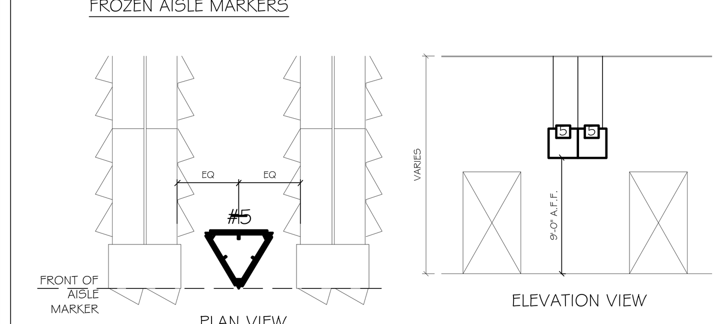

1. THE FRONT POINT OF THE AISLE MARKER IS TO ALIGN WITH THE FRONT OF THE FROZEN END CAP.
2. ALL AISLE MARKERS ARE TO BE INSTALLED IN THE CENTER OF THE AISLE.

GROCERY AISLE MARKERS

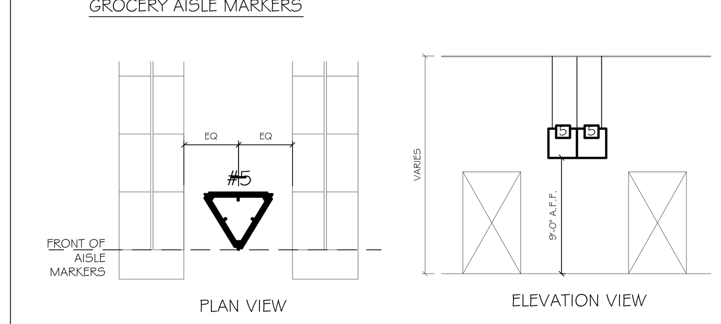

1. THE FRONT POINT OF THE AISLE MRKER IS TO ALIGN WITH THE END OF THE SHELVING, AT THE BACK OF THE END CAP.
2. ALL AISLE DIRECTORIES ARE TO BE INSTALLED IN THE CENTER OF THE AISLE.

d|fab DESIGN FABRICATIONS
1100 EAST MANDOLINE AVE.
SUITE 100
MADISON HEIGHTS, MI 48071
T 800.968.9440
F 248.597.0989

COPYRIGHT © 2023

ALL DRAWINGS AND DESIGNS ARE THE SOLE PROPERTY OF DESIGN FABRICATIONS, INC. THESE DRAWINGS ARE NOT TO BE COPIED WITHOUT WRITTEN CONSENT FROM DESIGN FABRICATIONS, INC. THESE DRAWINGS WERE PREPARED EXCLUSIVELY FOR THIS PROJECT. IT IS ILLEGAL FOR UNAUTHORIZED PERSONS TO USE THESE DRAWINGS OR DESIGNS FOR ANY OTHER PROJECT.

DO NOT SCALE DRAWINGS- USE FIGURED DIMENSIONS ONLY.

SHEET TITLE
OVERHEAD DECOR PLAN

PROJECT NAME
KROGER, D-361

PROJECT LOCATION
425 NORTH CENTER ST.
NORTHVILLE, MI, 48167

ISSUED FOR	DATE
80% REVIEW	11.22.23
100% DECOR	12.12.23

NO.	REVISED BY:	DATE
⚠	XXX	XXX

DRAWN: CMN/BP
CHECKED: CW/BP
SCALE: 3/32=1'-0"
JOB NO.: 2310-026
SHEET #: I1.3