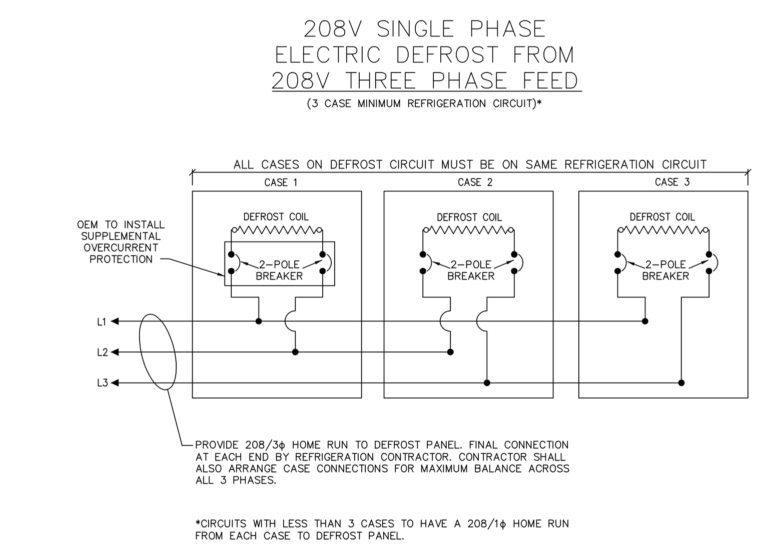

CONVENTIONAL CONTROL ELECTRIC DEFROST WIRING	DATE: 11/18/15 SCALE: NONE DRAWN: ZAW
MASTER INSTALLATION DETAIL	RISD-13

ORIGINAL ISSUE DATE 9/11/09

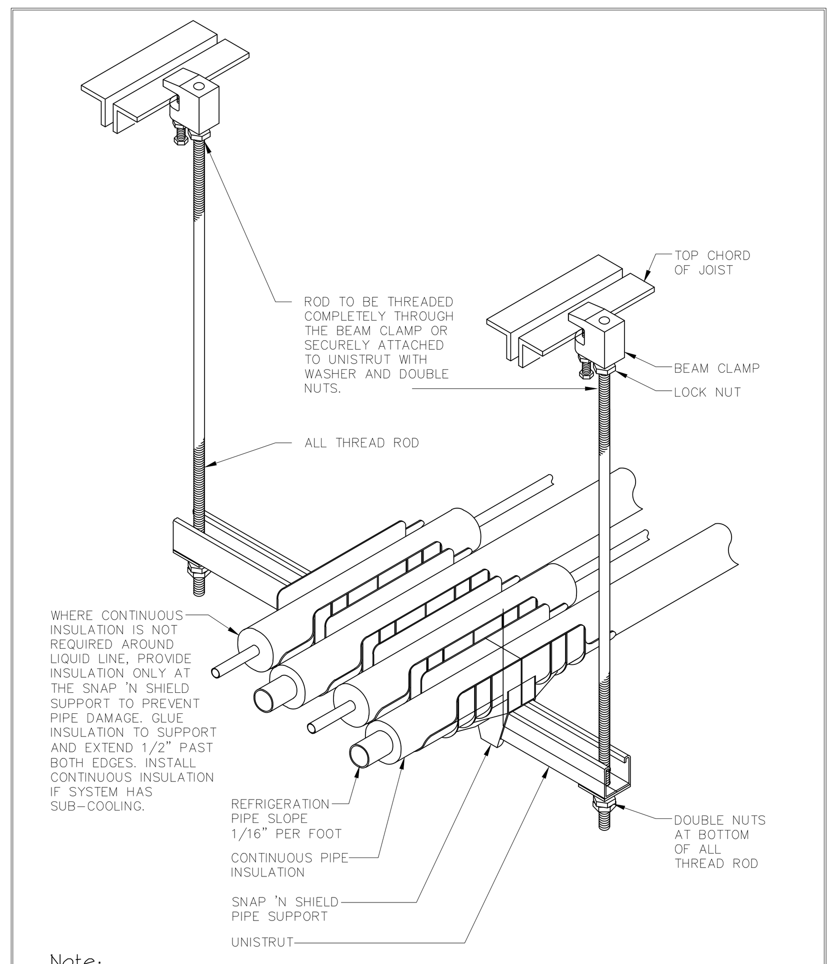

Note:

ATTACHMENTS CAN BE MADE TO EITHER TOP CHORD OF JOIST OR UNISTRUT CHANNEL SPANNING TOP JOIST. ATTACHMENT OF FIXTURES TO BOTTOM CHORD OF STEEL OR ROOF METAL DECKING WILL NOT BE PERMITTED.

Detail Based on:
SNAP 'N SHIELD PIPE SUPPORT BY COOPER B-Line.

REFRIGERATION PIPE SUPPORT DETAIL	DATE: 6/14/17 SCALE: NONE DRAWN: ZAW
MASTER INSTALLATION DETAIL	RISD-33

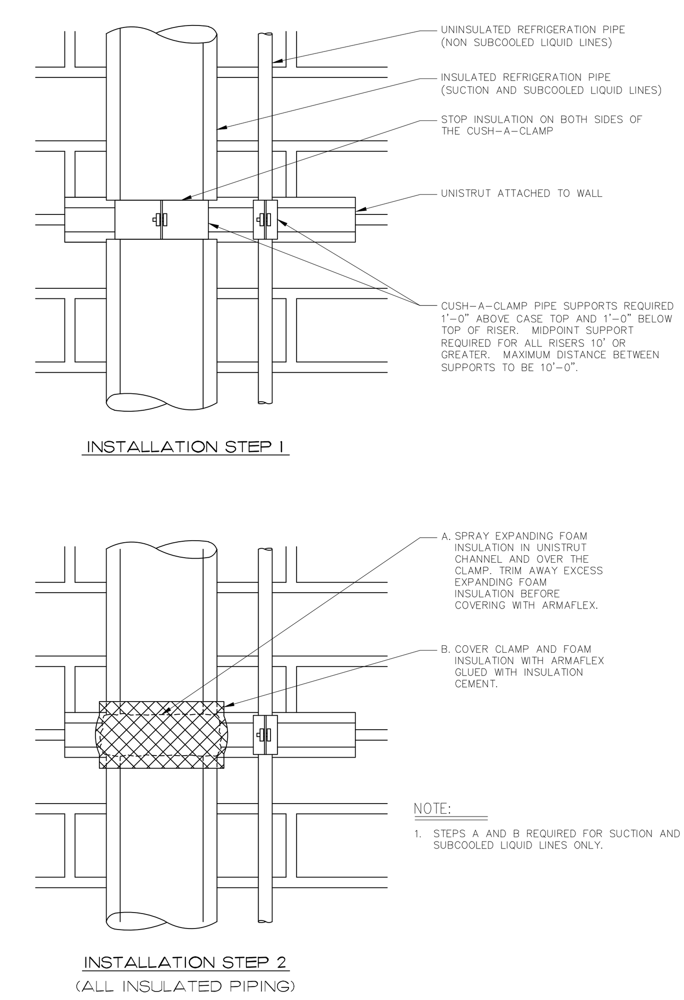

NOTE:
1. STEPS A AND B REQUIRED FOR SUCTION AND SUBCOOLED LIQUID LINES ONLY.

WALL MOUNTED REFRIGERATION PIPING RISER SUPPORT	DATE: 6/14/17 SCALE: NONE DRAWN: ZAW
MASTER INSTALLATION DETAIL	RISD-34

ORIGINAL ISSUE DATE 1/14/13

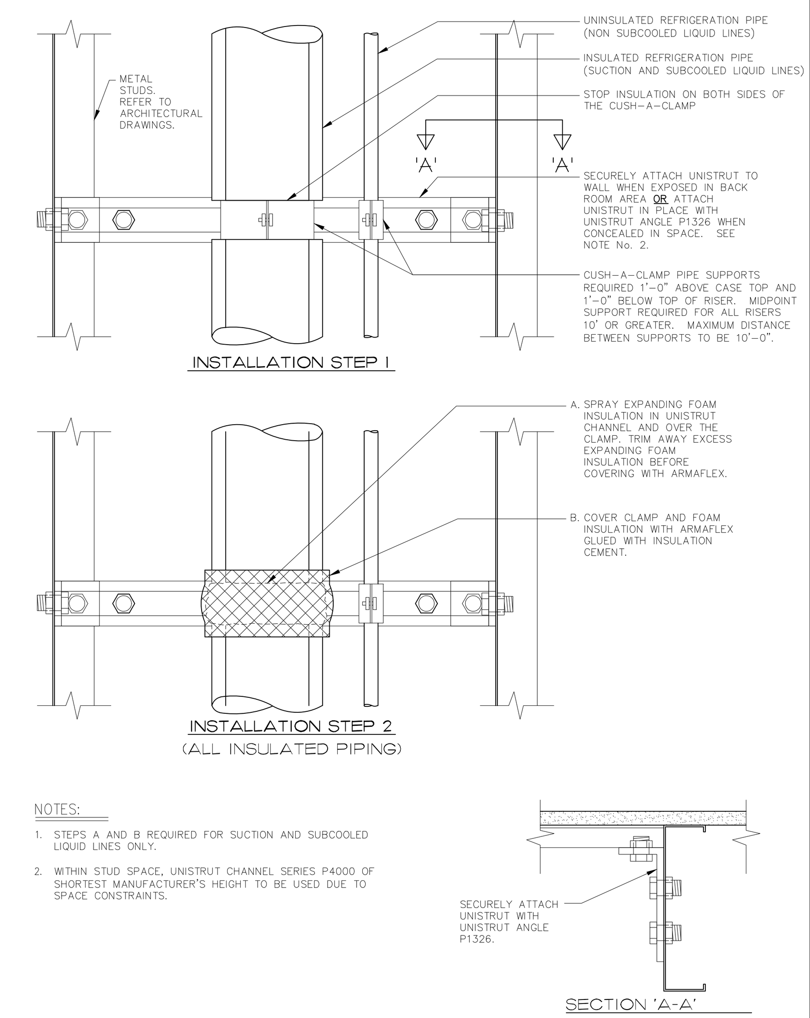

NOTES:
1. STEPS A AND B REQUIRED FOR SUCTION AND SUBCOOLED LIQUID LINES ONLY.
2. WITHIN STUD SPACE, UNISTRUT CHANNEL SERIES P4000 OF SHORTEST MANUFACTURER'S HEIGHT TO BE USED DUE TO SPACE CONSTRAINTS.

STUD WALL CAVITY REFRIGERATION PIPING RISER	DATE: 6/14/17 SCALE: NONE DRAWN: ZAW
MASTER INSTALLATION DETAIL	RISD-34A

ORIGINAL ISSUE DATE 11/5/13

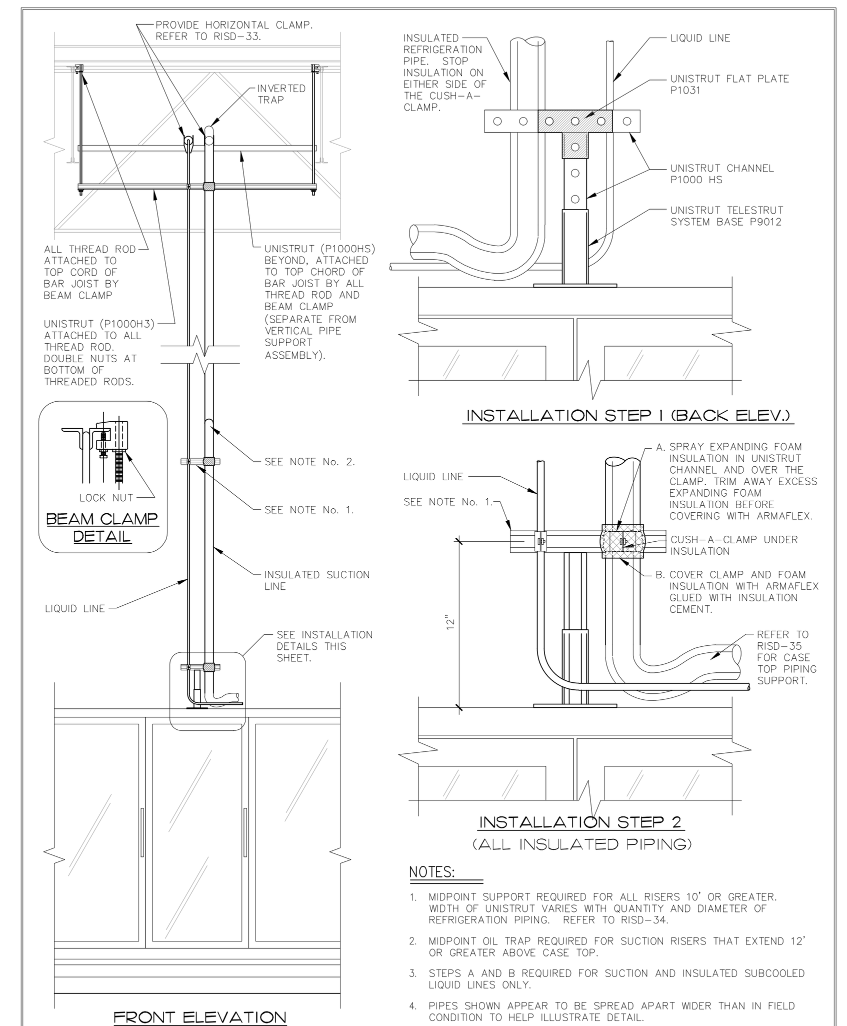

NOTES:
1. MIDPOINT SUPPORT REQUIRED FOR ALL RISERS 10' OR GREATER. WIDTH OF UNISTRUT VARIES WITH QUANTITY AND DIAMETER OF REFRIGERATION PIPING. REFER TO RISD-34.
2. MIDPOINT OIL TRAP REQUIRED FOR SUCTION RISERS THAT EXTEND 12' OR GREATER ABOVE CASE TOP.
3. STEPS A AND B REQUIRED FOR SUCTION AND INSULATED SUBCOOLED LIQUID LINES ONLY.
4. PIPES SHOWN APPEAR TO BE SPREAD APART WIDER THAN IN FIELD CONDITION TO HELP ILLUSTRATE DETAIL.

FREESTANDING REFRIGERATION PIPING RISER SUPPORT	DATE: 6/14/17 SCALE: NONE DRAWN: ZAW
MASTER INSTALLATION DETAIL	RISD-34B

ORIGINAL ISSUE DATE 1/30/15

NOTES:

THIS DETAIL IS TYPICAL FOR ALL CASE TOP PIPING. PIPING TO BE KEPT AS CLOSE TO REAR OF CASES AS PRACTICAL AND TO BE ROUTED NO HIGHER THAN NECESSARY. SUCTION LINES TO CONNECT AT TOP. FOR CONVENTIONAL REFRIGERANTS LIQUID LINES TO FEED FROM BOTTOM OR END (SHOWN). FOR CO2 REFRIGERANT LIQUID LINES TO FEED FROM SIDE OR END (NOT SHOWN).

DO NOT SLOPE HORIZONTAL CASE TOP PIPING. ALL OTHER PIPING TO BE SLOPED PER SPECS.

MITER AND SEAL ALL INSULATION (SEE SPECS)

FOR CONVENTIONAL REFRIGERANTS ALL HORIZONTAL CASE TOP PIPING TO BE SUPPORTED WITH TRIPLE STACKED 1 5/8" UNISTRUT SPACED EVERY 6'-0" MAXIMUM (SHOWN). FOR CO2 REFRIGERANT ALL HORIZONTAL CASE TOP PIPING TO BE SUPPORTED WITH DOUBLE STACKED 1 5/8" UNISTRUT SPACED EVERY 6'-0" MAXIMUM (NOT SHOWN). FASTEN TO CASE TOP AND CLAMP TO PIPING WITH CUSH-A-CLAMPS. NO SADDLES PERMITTED. A PIPING SUPPORT TO BE WITHIN 2'-0" OF ALL CASE PENETRATIONS & RISERS.

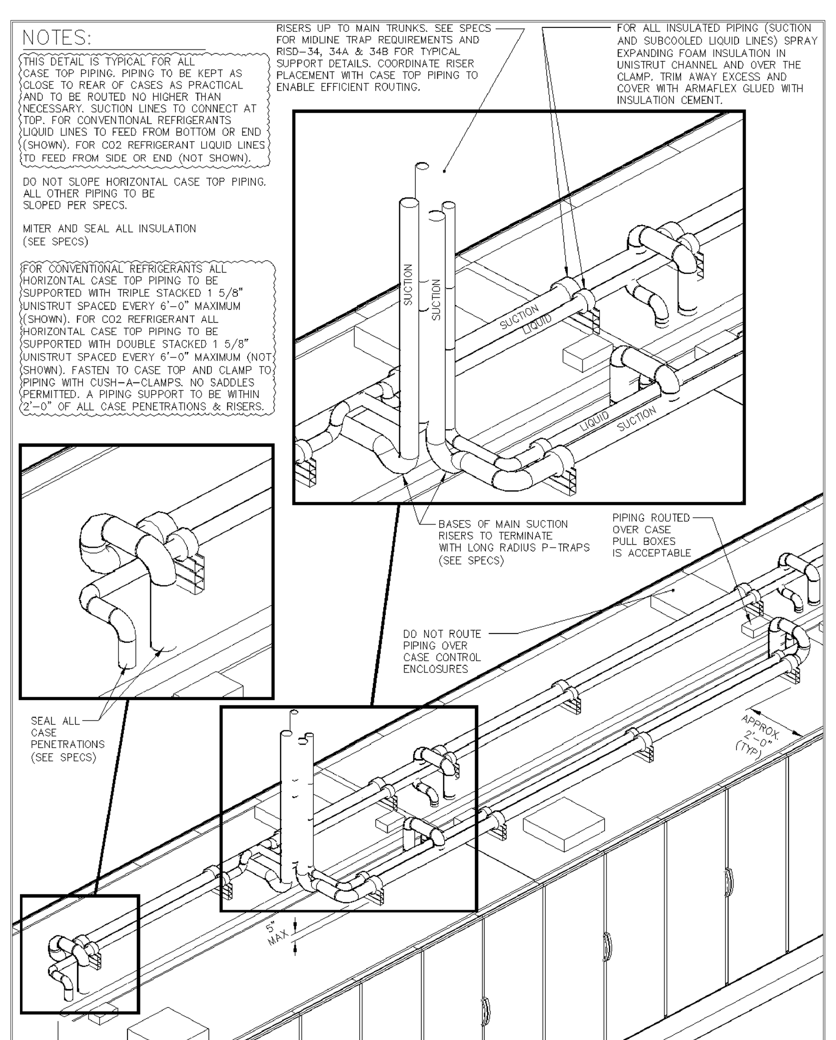

CASE TOP PIPING	DATE: 7/18/22 SCALE: NONE DRAWN: ZAW
MASTER INSTALLATION DETAIL	RISD-35

ORIGINAL ISSUE DATE 11/5/13

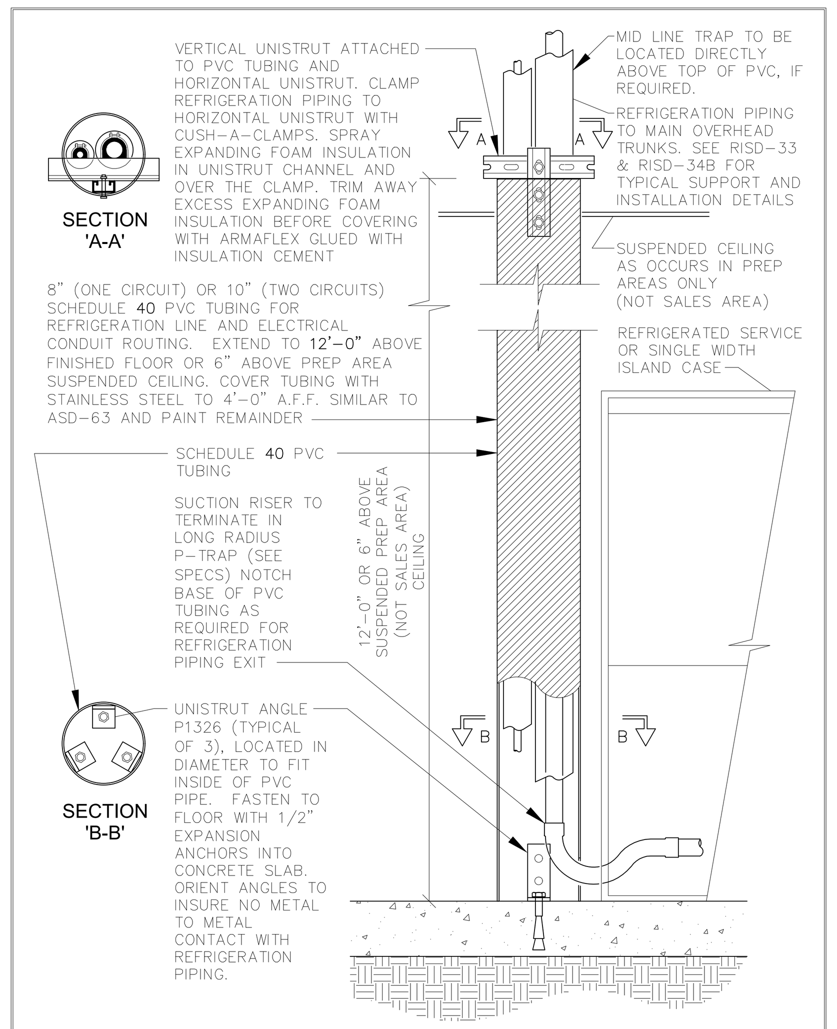

SERVICE CASE AND SINGLE WIDE ISLAND REFRIGERATION RISERS	DATE: 3/9/18 SCALE: NONE DRAWN: ZAW
MASTER INSTALLATION DETAIL	RISD-36

ORIGINAL ISSUE DATE 6/14/17

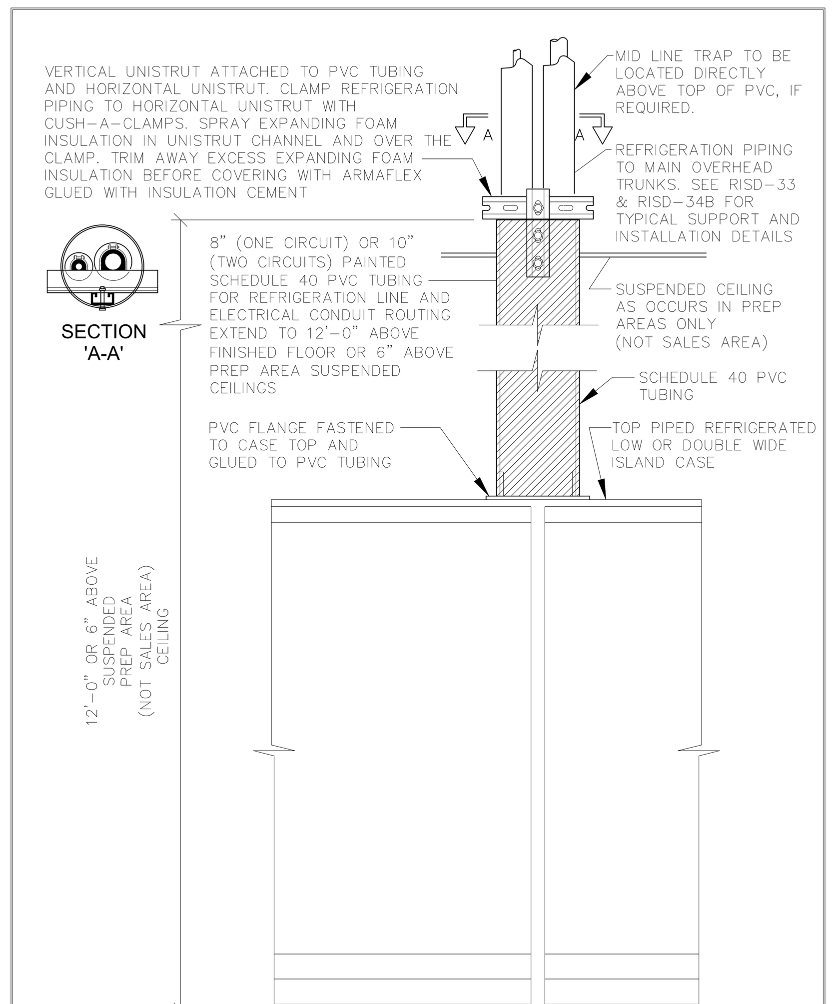

LOW AND DOUBLE WIDE ISLAND REFRIGERATION RISERS	DATE: 3/9/18 SCALE: NONE DRAWN: ZAW
MASTER INSTALLATION DETAIL	RISD-36A

ORIGINAL ISSUE DATE 6/14/17

- FOR REFERENCE ONLY -

NOTE:
THIS DRAWING IS INTENDED ONLY TO SHOW THE REQUIREMENTS OF THE KROGER CO. THE DESIGN OF THE BUILDING TO CONFORM TO ALL APPLICABLE LAWS, CODES, REGULATIONS, ORDINANCES AND APPROVAL OF THE INSPECTION AUTHORITIES HAVING JURISDICTION IS THE RESPONSIBILITY OF THE ARCHITECT EMPLOYED BY THE OWNER.

MICHIGAN

40393 GRAND RIVER AVENUE
NOVI, MICHIGAN
PHONE: (248) 957-2254 FAX: (248) 957-2255

Kroger FRESH FOR EVERYONE™
GENERAL OFFICE
FACILITY ENGINEERING
1014 VINE ST, CINCINNATI, OHIO 45202
PH: (513) 762-1467 FAX: (513) 762-4012

MINOR CAPITAL

D-415

8999 MACOMB ST
GROSSE ILE, MI 48138

CURRENT PLAN DATE: 7/13/2023
ORIGINAL PLAN DATE: 7/13/2023
DRAWN: D. GRIESSMANN
CHECKED:
REVISIONS:

STANDARD PLOTTED SCALE: NO SCALE

BUILDING STATS:	
TOTAL SHELVING	1,085 SF
SALES AREA (% OF GROSS BUILDING)	19,877 SF (68 %)
BASE STORE	28,463 SF
MEZZANINE	0 SF
DOCK / UTILITY	600 SF

GROSS BUILDING 29,063 SF

REFRIGERATION STANDARD DETAILS

STEEL PACKAGE ID: D-415

SHEET: R5.1

CAD FILE: