© 2021 Moody Nolan, Inc.

208V SINGLE PHASE ELECTRIC DEFROST FROM 208V THREE PHASE FEED

(3 CASE MINIMUM REFRIGERATION CIRCUIT)*

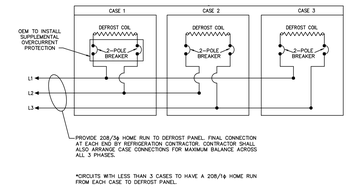

*CIRCUITS WITH LESS THAN 3 CASES TO HAVE A 208/1ϕ HOME RUN FROM EACH CASE TO DEFROST PANEL.

CONVENTIONAL CONTROL ELECTRIC DEFROST WIRING	DATE: 11/18/15 SCALE: NONE DRAWN: ZAW
MASTER INSTALLATION DETAIL	RISD-13

ORIGINAL ISSUE DATE 9/11/09

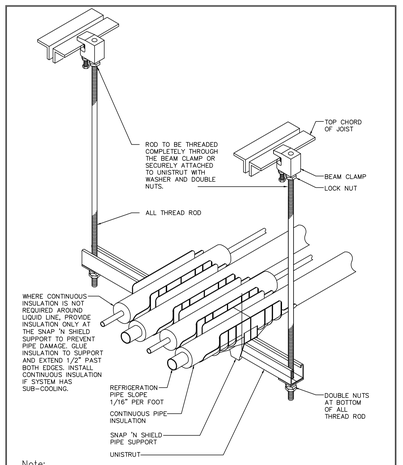

Note:

ATTACHMENTS CAN BE MADE TO EITHER TOP CHORD OF JOIST OR UNISTRUT CHANNEL SPANNING TOP JOIST. ATTACHMENT OF FIXTURES TO BOTTOM CHORD OF STEEL OR ROOF METAL DECKING WILL NOT BE PERMITTED.

Detail Based on:
SNAP 'N SHIELD PIPE SUPPORT BY COOPER B-Line.

REFRIGERATION PIPE SUPPORT DETAIL	DATE: 6/14/17 SCALE: NONE DRAWN: ZAW
MASTER INSTALLATION DETAIL	RISD-33

ORIGINAL ISSUE DATE 7/23/12

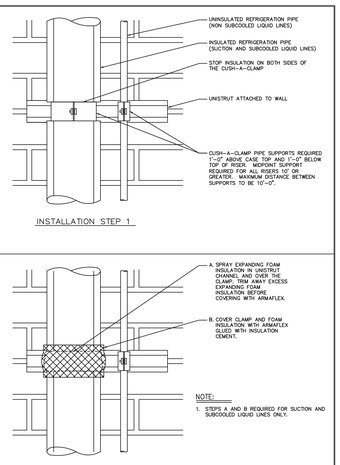

NOTE:
1. STEPS A AND B REQUIRED FOR SUCTION AND SUBCOOLED LIQUID LINES ONLY.

WALL MOUNTED REFRIGERATION PIPING RISER SUPPORT	DATE: 6/14/17 SCALE: NONE DRAWN: ZAW
MASTER INSTALLATION DETAIL	RISD-34

ORIGINAL ISSUE DATE 1/14/13

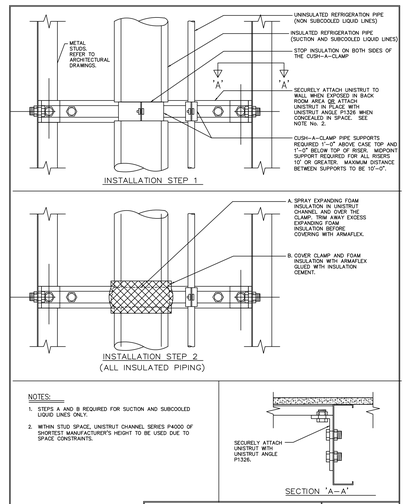

NOTES:
1. STEPS A AND B REQUIRED FOR SUCTION AND SUBCOOLED LIQUID LINES ONLY.
2. WITHIN STUD SPACE, UNISTRUT CHANNEL SERIES P4000 OF SHORTEST MANUFACTURER'S HEIGHT TO BE USED DUE TO SPACE CONSTRAINTS.

STUD WALL CAVITY REFRIGERATION PIPING RISER	DATE: 6/14/17 SCALE: NONE DRAWN: ZAW
MASTER INSTALLATION DETAIL	RISD-34A

ORIGINAL ISSUE DATE 11/5/13

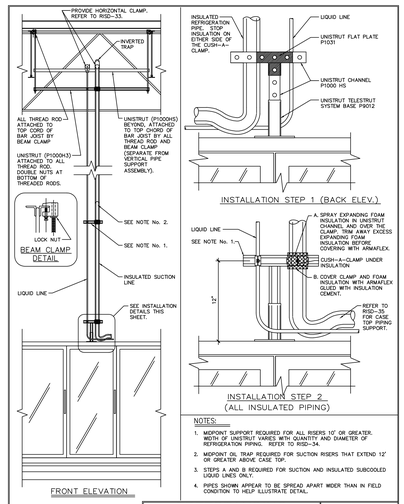

NOTES:
1. MIDPOINT SUPPORT REQUIRED FOR ALL RISERS 10' OR GREATER. WIDTH OF UNISTRUT VARIES WITH QUANTITY AND DIAMETER OF REFRIGERATION PIPING. REFER TO RISD-34.
2. MIDPOINT OIL TRAP REQUIRED FOR SUCTION RISERS THAT EXTEND 12' OR GREATER ABOVE CASE TOP.
3. STEPS A AND B REQUIRED FOR SUCTION AND INSULATED SUBCOOLED LIQUID LINES ONLY.
4. PIPES SHOWN APPEAR TO BE SPREAD APART WIDER THAN IN FIELD CONDITION TO HELP ILLUSTRATE DETAIL.

FREESTANDING REFRIGERATION PIPING RISER SUPPORT	DATE: 6/14/17 SCALE: NONE DRAWN: ZAW
MASTER INSTALLATION DETAIL	RISD-34B

ORIGINAL ISSUE DATE 1/30/15

NOTES:
ONLY DETAIL IS TYPICAL FOR ALL CASE TOP PIPING. PIPING TO BE KEPT AS CLOSE TO REAR OF CASES AS PRACTICAL AND TO BE ROUTED NO HIGHER THAN 2'-0" ABOVE CASE TOP. PIPING TO CONNECT AT TOP FOR CONVENTIONAL REFRIGERANTS (LIQUID LINES TO FEED FROM BOTTOM OR END (SHOWN). FOR CO2 REFRIGERANT LIQUID LINES TO FEED FROM SIDE OR END (NOT SHOWN).
DO NOT SLOPE HORIZONTAL CASE TOP PIPING. ALL OTHER PIPING TO BE SLOPED PER SPECS.
WRAP AND SEAL ALL INSULATION (SEE SPECS)
FOR CONVENTIONAL REFRIGERANTS: ALL HORIZONTAL CASE TOP PIPING TO BE SUPPORTED WITH TRIPLE STACKED 1 5/8" UNISTRUT SPACED EVERY 5'-0" MAXIMUM (SHOWN). FOR CO2 REFRIGERANT ALL HORIZONTAL CASE TOP PIPING TO BE SUPPORTED WITH DOUBLE STACKED 1 5/8" UNISTRUT SPACED EVERY 4'-0" MAX (NOT SHOWN). FASTEN TO CASE TOP WITH CLAMP TO PIPING WITH CUSH-A-CLAMPS. NO SADDLES PERMITTED. A PIPING SUPPORT TO BE WITHIN 2'-0" OF ALL CASE PENETRATIONS & RISERS.

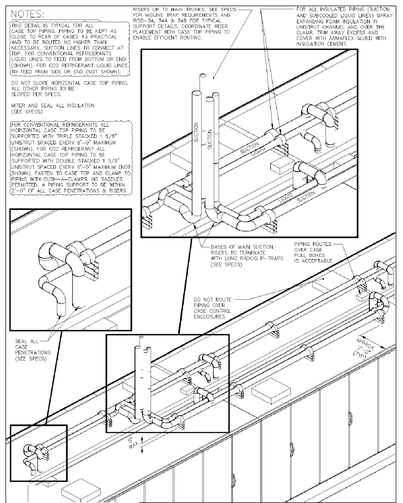

CASE TOP PIPING	DATE: 7/18/22 SCALE: NONE DRAWN: ZAW
MASTER INSTALLATION DETAIL	RISD-35

ORIGINAL ISSUE DATE 11/5/13

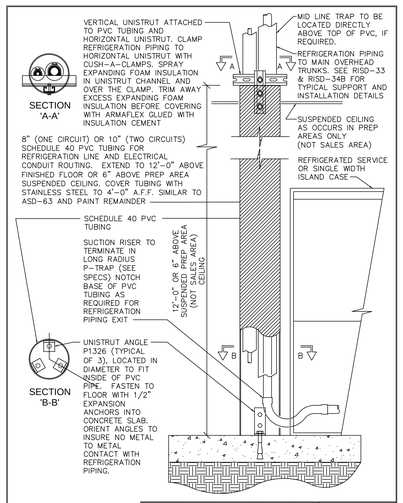

SERVICE CASE AND SINGLE WIDE ISLAND REFRIGERATION RISERS	DATE: 3/9/18 SCALE: NONE DRAWN: ZAW
MASTER INSTALLATION DETAIL	RISD-36

ORIGINAL ISSUE DATE 6/14/17

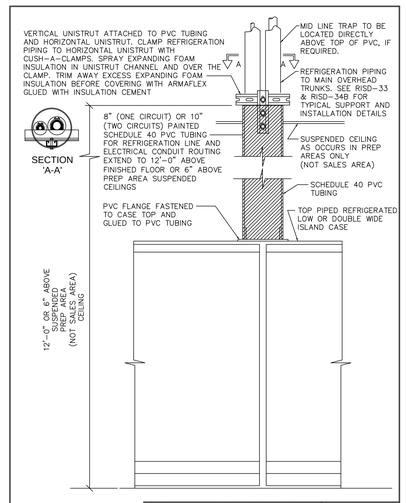

LOW AND DOUBLE WIDE ISLAND REFRIGERATION RISERS	DATE: 3/9/18 SCALE: NONE DRAWN: ZAW
MASTER INSTALLATION DETAIL	RISD-36A

ORIGINAL ISSUE DATE 6/14/17

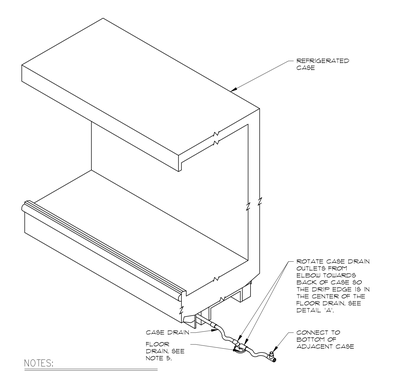

NOTES:
1. DO NOT USE CASE DRAIN SMALLER THAN THE NOMINAL DIAMETER OF PIPE OR WATER SEAL SUPPLIED WITH THE MERCHANDISER.
2. SLOPE THE CASE DRAIN IN THE DIRECTION OF FLOW 1/4" PER FT.
3. CASE DRAIN MUST BE SUPPORTED NO MORE THAN 24" FROM DRAIN HUB TEE.
4. PROVIDE A SUITABLE AIR BREAK BETWEEN FLOOD RIM OF FLOOR DRAIN AND OUTLET OF CASE DRAIN. AN ALTERNATIVE IS TO CUT THE LAST SECTION OF CASE DRAIN AT AN ANGLE.
5. 3" HUB DRAIN FOR PROJECTS UNDER UNIFORM PLUMBING CODE AND 4" HUB DRAIN FOR PROJECTS UNDER INTERNATIONAL PLUMBING CODE.

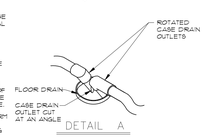

CASE DRAIN DETAIL

10/11/12
ZAW
PISD-1

CURRENT PLAN DATE:	8/10/2023
ORIGINAL PLAN DATE:	8/10/2023
DRAWN:	CHECKED:
	S. GRIESSMANN
REVISIONS:	
STANDARD PLOTTED SCALE:	1/16"=1'-0"
BUILDING STATS:	
TOTAL SHELVING	2,533 LF
SALES AREA % OF GROSS BUILDING	37,303 SF 70 %
BASE STORE	48,782 SF
MEZZANINE	
DOCK / UTILITY	3,444 SF
GROSS BUILDING	53,149 SF
REFRIGERATION STANDARD DETAILS	
STEEL PACKAGE ID:	Not Applicable
	N-641
SHEET:	R5.1
CAD FILE:	21-N641_R51-REFRIGERATION

#	Date	Change Description

KROGER N641
PORT CLINTON
2028 EAST HARBOR ROAD
PORT CLINTON, OHIO 43452
for
THE KROGER COMPANY

Moody Nolan
300 Spruce Street
Suite 300
Columbus, Ohio 43215
Phone: (614) 461-4664
Fax: (614) 280-8881
www.moodynolan.com

Dwg. Coord.: JWB	Tech. Coord.:	Proj #: 23016.01
REFRIGERATION DETAILS		R5.1
BID/PERMIT		2/2/2024

PLOTTED BY: $USER$ $DATE$ $TIME$ $FILE$