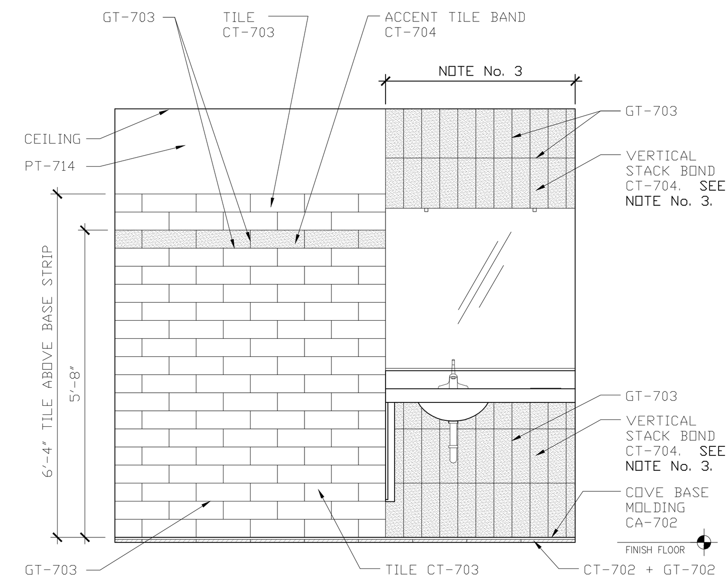

ARTISAN WALL TILE PATTERN, TYPICAL ELEVATION

SCALE: 1/2" = 1'-0"

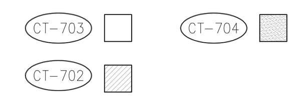

CA-702: PVC COVE BASE MOLDING.

NOTES:

1. FLOOR TILE TO BE (CT-702) (RUNNING BOND PATTERN)
2. FLOOR GROUT: GT-702 1/8" WIDTH.
   WALL GROUT: GT-703 1/8" WIDTH.
3. FULL HEIGHT ACCENT WALL SECTION IN CUSTOMER RESTROOMS ONLY, GENERALLY ACCESSIBLE DIRECTLY FROM THE SALES FLOOR. NOT USED IN "BACK OF HOUSE" OR EMPLOYEES ONLY RESTROOMS.

ARTISAN RESTROOM WALL TILE PATTERN | DATE: 3/21/19 | SCALE: AS NOTED | DRAWN: ZAW

MASTER SPECIFICATION DETAIL | GID-3

ORIGINAL ISSUE DATE 10/16/18.

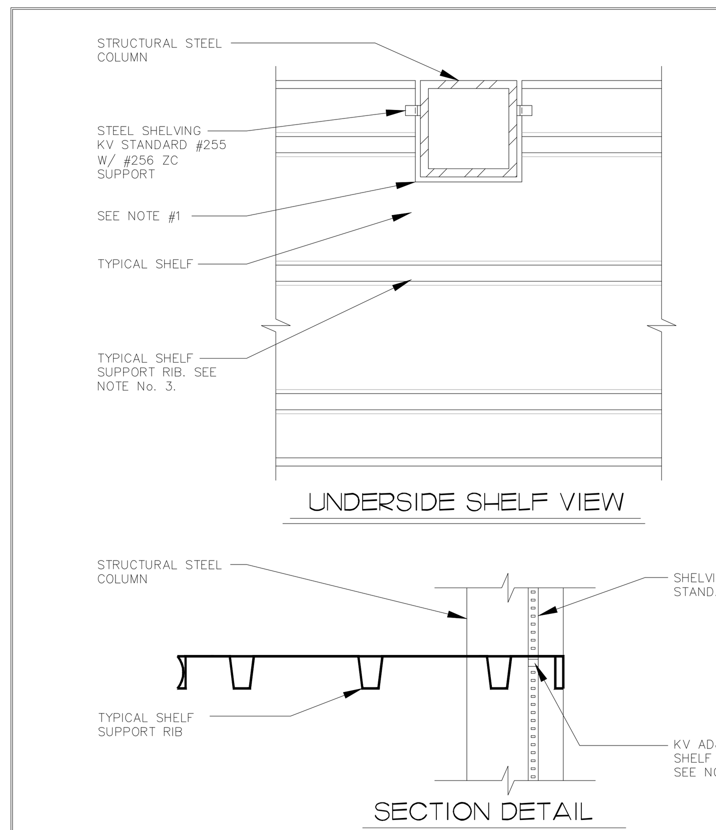

NOTES:

1. CUT OPENING FOR COLUMN AS TIGHT AS POSSIBLE. 1/4" GAP MAXIMUM.
2. INSTALL STANDARD BETWEEN SHELVING RIBS. STANDARD LOCATIONS MAY VARY BASED ON SHELVING CUT OPENINGS AND COLUMN POSITIONS.
3. SUPPORT RIB LOCATION VARIES BY MANUFACTURER AND SHELF DEPTH.

CUT SHELVING SUPPORT DETAIL | DATE: 7/23/12 | SCALE: NONE | DRAWN: ZAW

MASTER SPECIFICATION DETAIL | GISD-50

ORIGINAL ISSUE DATE 7/23/12

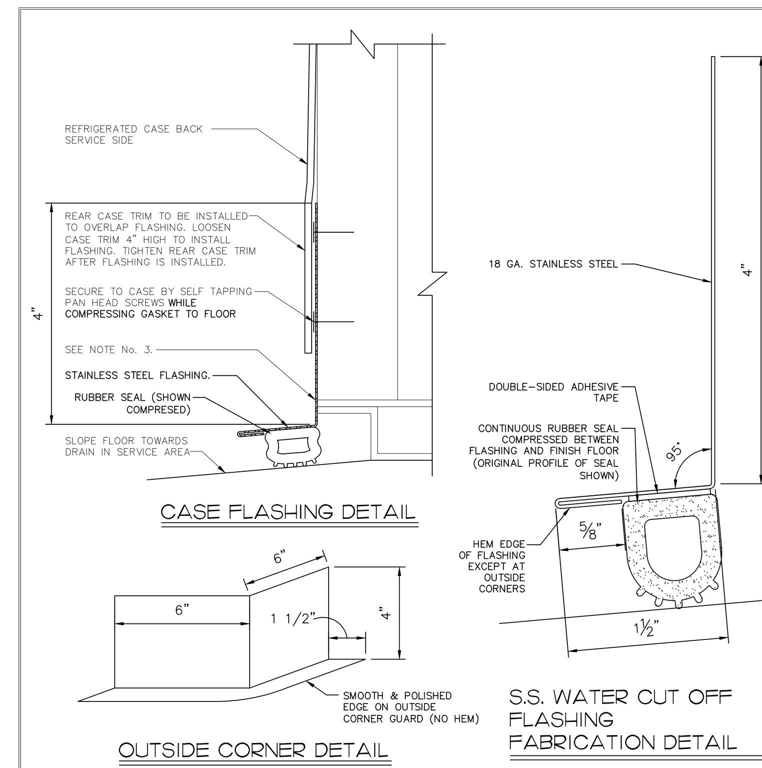

NOTES:

1. FOR CASES THAT DO NOT HAVE A REMOVABLE REAR CASE TRIM, ATTACH THE FLASHING TO THE BACK OF THE CASE AND CAULK ALONG THE TOP.
2. GC TO PROVIDE "TRIM-LOK X2828BT" EPDM SPONGE-RUBBER D-SHAPED SEAL AND DOUBLE-SIDED 3M BONDED TAPE SYSTEM TO ADHERE TO FLASHING
3. WHERE FLASHING PIECES BUTT TOGETHER CAULK JOINT WITH SILVER SILICONE ENTIRE LENGTH OF JOINT EXPOSED.
4. ENSURE GOOD COMPRESSION OF RUBBER SEAL TO THE FLOOR FOR WATER-TIGHT FUNCTION
5. ENSURE BREAKS BETWEEN SECTIONS OR CUT OUT SECTIONS TO PROVIDE ACCESS TO ANY CONTROLS AT THE BOTTOM OF THE CASES

STAINLESS STEEL WATER CUT OFF FLASHING | DATE: 12/02/21 | SCALE: NONE | DRAWN: JDB

MASTER SPECIFICATION DETAIL | GISD-14

ORIGINAL ISSUE DATE 10/11/12

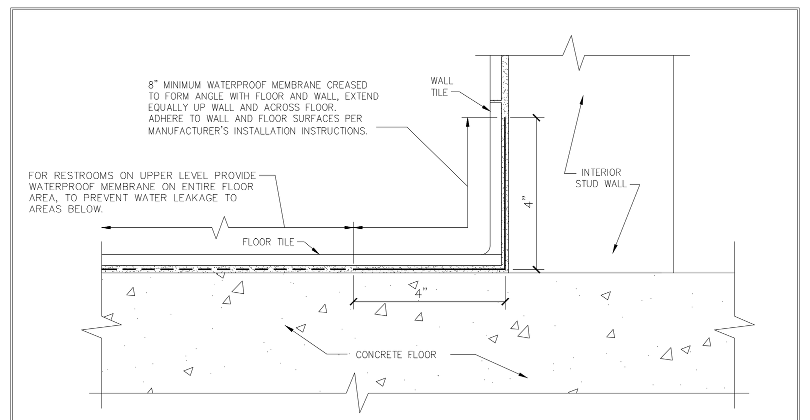

NOTES:

1. PROVIDE WATERPROOFING MEMBRANE OF POLYETHYLENE MATERIAL ON ALL INSIDE WALLS OF RESTROOMS, TO REDUCE WATER LEAKAGE FROM RESTROOM TO ADJACENT AREAS. SEE KROGER SPECIFICATIONS SECTION 09 30 00 THIN-SET TILING.
2. ONCE MEMBRANE HAS BEEN COMPLETELY BONDED -- SEAMS, CORNERS & CONNECTIONS -- THE FLOOR & WALL TILES MAY BE APPLIED.
3. OVERLAP WATERPROOFING MEMBRANE BEYOND PRE-FORMED CORNER, ADHERE TO WALL AND FLOOR SURFACES PER MANUFACTURER'S RECOMMENDATIONS.

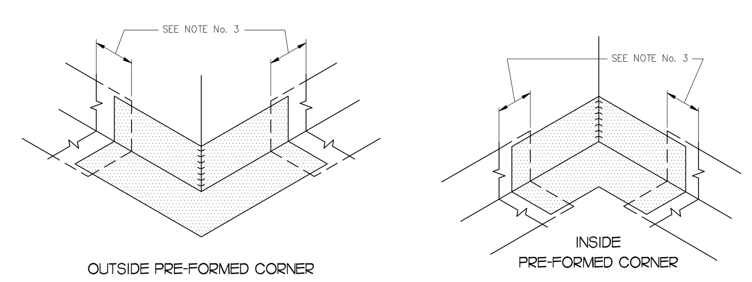

WATERPROOFING MEMBRANE FOR RESTROOMS | DATE: 5/18/18 | SCALE: NONE | DRAWN: ZAW

MASTER SPECIFICATION DETAIL | ASD-164

ORIGINAL ISSUE DATE 4/11/07

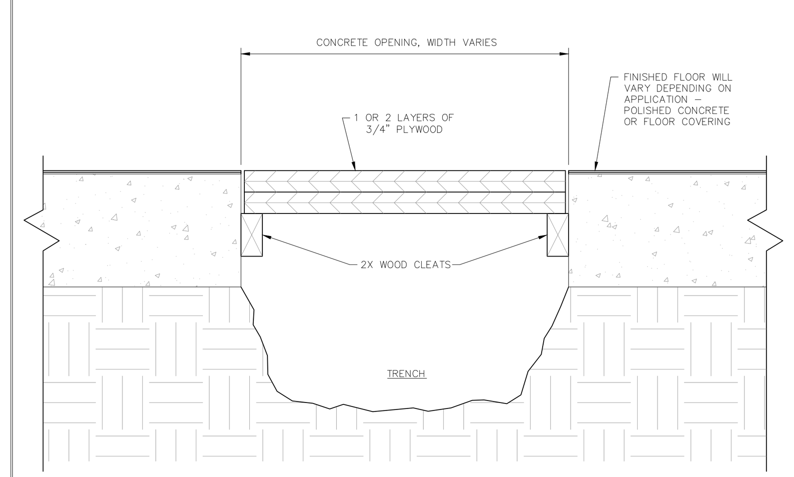

NOTES:

1. THE CONTRACTOR(S) ARE RESPONSIBLE FOR ALL MEANS AND METHODS TO DESIGN AND INSTALL TEMPORARY COVERS FOR TRENCHES, HOLES, ETC. TO ENSURE STABILITY/STRUCTURAL INTEGRITY. PROVIDE A SAFE SURFACE FOR THE APPLICABLE USES WITHOUT ALLOWING BOWING OR DEFLECTION AND MINIMIZE GAPS. REDUCING TRIP HAZARDS BY LEAVING FLUSH EDGES, FASTENING COVERS SECURELY IN PLACE AND HIGHLIGHTING TRANSITIONS WITH TAPE (CONTRASTING COLOR TO FLOOR) IS CRITICAL.
2. COORDINATE TRENCH CUTS WITH SAW CUTTING VENDOR TO ENSURE STRAIGHT AND SQUARE LINES WITHOUT CROSS CUTTING OR OVERCUTS.
3. ALTERNATE: STEEL PLATES EXTENDING BEYOND THE TRENCH CAN BE USED. PROVIDE A SAFE SURFACE FOR THE APPLICABLE USES WITHOUT ALLOWING BOWING OR DEFLECTION. REDUCING TRIP HAZARDS BY COVERING STEEL PLATE WITH BLACK MATS, HIGHLIGHTING TRANSITIONS WITH TAPE (COLOR CONTRASTING TO THE FLOOR) IS CRITICAL. REVIEW THIS METHOD WITH KROGER PROJECT MANAGER FOR APPROVAL PRIOR TO USE.

TEMPORARY COVER FOR FLOOR SLAB TRENCHES | DATE: 9/9/22 | SCALE: NONE | DRAWN: JDB

MASTER SPECIFICATION DETAIL | ASD-162D

ORIGINAL ISSUE DATE 09/09/22

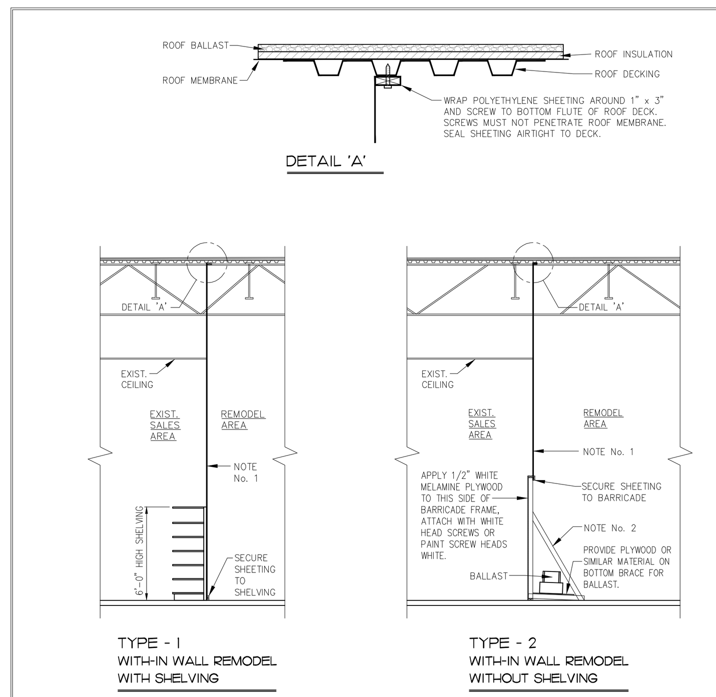

NOTES:

1. **6 MIL FIRE RETARDANT (NFPA 701)** POLYETHYLENE SHEETING DUST BARRIER -- USE **WHITE**, CLEAR OR FROSTED/**TRANSLUCENT** SHEETING ONLY. BLACK SHEETING IS NOT ACCEPTABLE. TAPE FULL LENGTH OF JOINT, SECURELY ATTACH TO EITHER BACK OF SHELVING OR 2" x 4" WOOD BRACE BARRICADE, AND EXTEND UP TO ROOF DECK AS INDICATED.
2. 2" x 4" WOOD BRACED BARRICADE 8'-0" HIGH, PROVIDE BALLAST ON BOTTOM BRACE TO SECURE BARRICADE IN PLACE, DO NOT NAIL TO FLOOR, (BALLAST -- i.e. – CONCRETE BLOCKS, SANDBAGS or MISCELLANEOUS CONSTRUCTION MATERIALS). BALLAST & KICKERS SHALL BE ON THE WORK AREA SIDE AND NOT ON THE CUSTOMER ACCESS SIDE.
3. ANY PORTION OF THE SPRINKLER SYSTEM WHICH BECOMES EXPOSED TO POSSIBLE FREEZING TEMPERATURES MUST BE PROTECTED FROM FREEZING WITH HEAT TAPE & INSULATION.

TEMPORARY CONSTRUCTION BARRIERS | DATE: 7/31/19 | SCALE: NONE | DRAWN: DS/JQ/ZW

MASTER SPECIFICATION DETAIL | ASD-162A

ORIGINAL ISSUE DATE 6/1/07

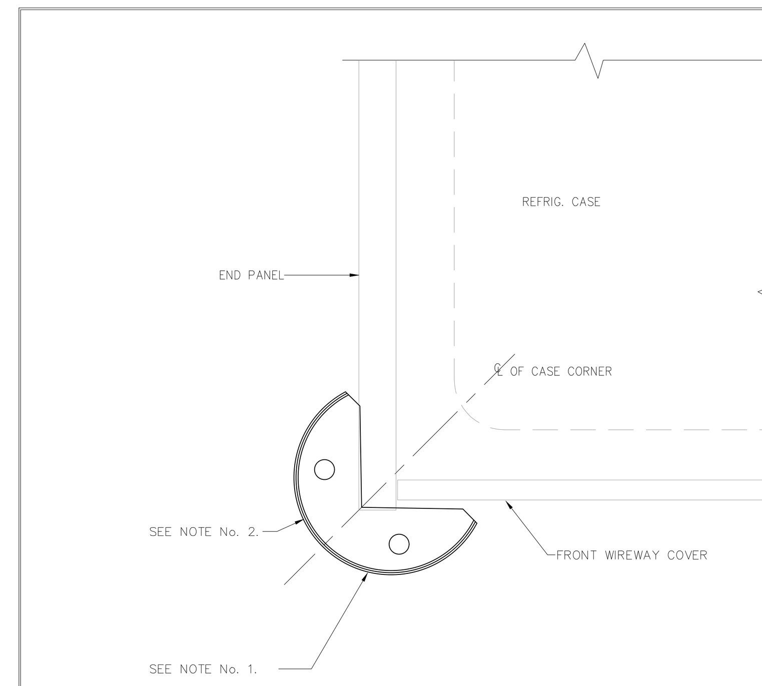

NOTES:

1. DESIGNED FOR USE WITH GLASS DOOR END CASES. CASE CORNER GUARD. REFER TO SECTION 11 41 13 PARAGRAPH 2.2 B GENERAL STORE FIXTURE INSTALLATION IN SPECIFICATIONS. REFER TO FIXTURE PLAN FOR QUANTITY AND LOCATIONS.
2. CASE CORNER GUARD TO BE INSTALLED, AFTER CASE HAS BEEN SET. INSTALL CASE GUARD AS CLOSE TO CASE AS POSSIBLE PER MANUFACTURER'S INSTALLATION INSTRUCTIONS.

Note:
Detail Based On Installation Instructions From National Cart Co. 5050001.
Legend Number GE63CS. Height 12".

GLASS DOOR END CASE CORNER GUARD | DATE: 6/5/15 | SCALE: NONE | DRAWN: ZAW

MASTER SPECIFICATION DETAIL | ASD-160A

ORIGINAL ISSUE DATE 6/5/15

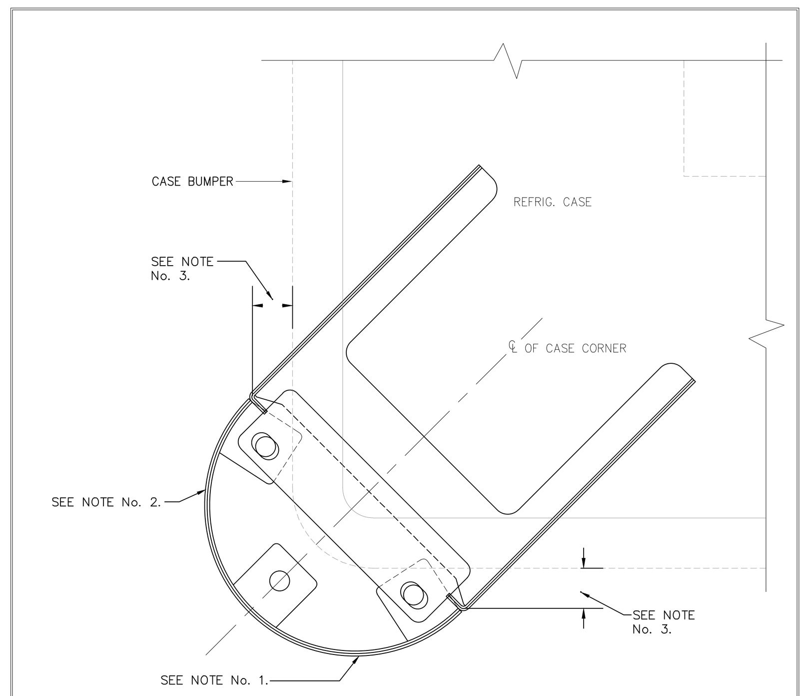

NOTES:

1. DESIGNED FOR USE WITH ISLAND REFRIGERATED CASES (WITH STRAIGHT FRONTS) IN DAIRY, MEAT, SEAFOOD AND DELI DEPARTMENTS. CASE CORNER GUARD. REFER TO SECTION 11 41 13 PARAGRAPH 2.2 B GENERAL STORE FIXTURE INSTALLATION IN SPECIFICATIONS. REFER TO FIXTURE PLAN FOR QUANTITY AND LOCATIONS.
2. CASE CORNER GUARD TO BE INSTALLED, AFTER CASE HAS BEEN SET. INSTALL CASE GUARD (AND FLANGE EXTENSION) AS CLOSE TO CASE AS POSSIBLE PER MANUFACTURER'S INSTALLATION INSTRUCTIONS.
3. MAXIMUM 1" PER MANUFACTURER'S INSTALLATION INSTRUCTIONS.
4. FOR CASES WITH SHALLOW TOE KICK IT MAY BE NECESSARY TO FIELD CUT FLANGE FOR PROPER POSITIONING OF GUARD.

Note:
Detail Based On Installation From National Cart Co. A5050009 (5050009 And 5050010).

REFRIGERATED CASE CORNER GUARD | DATE: 6/5/15 | SCALE: NONE | DRAWN: ZAW

MASTER SPECIFICATION DETAIL | ASD-160

ORIGINAL ISSUE DATE 7/6/06

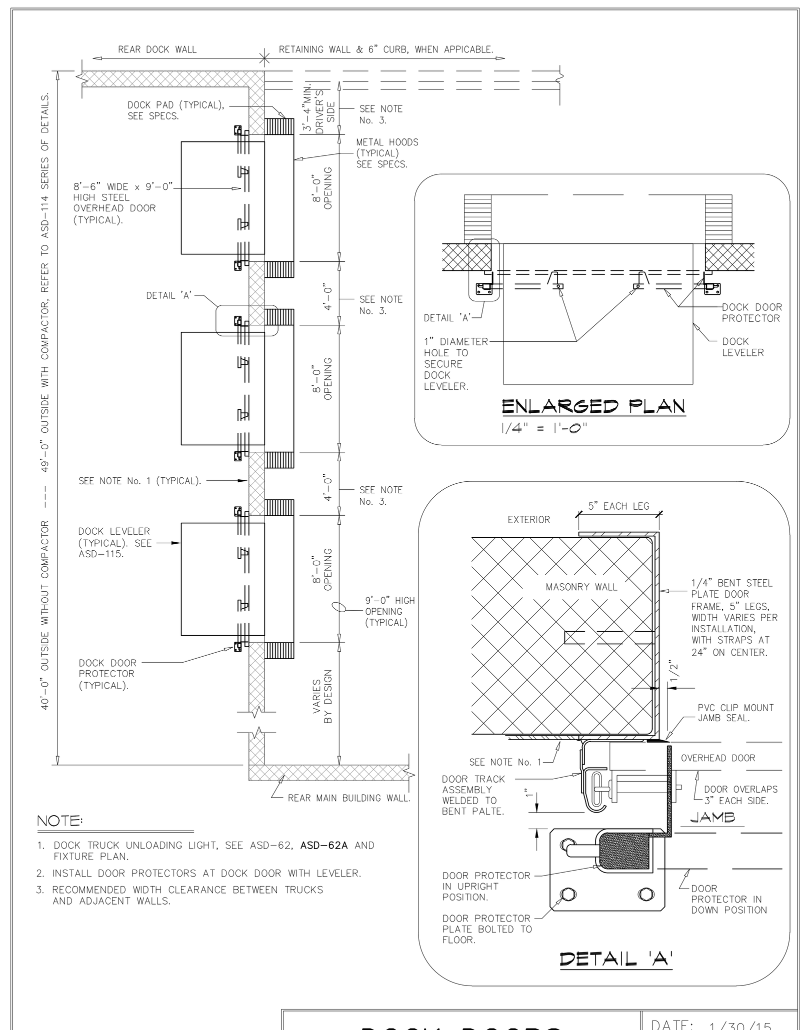

NOTE:

1. DOCK TRUCK UNLOADING LIGHT, SEE ASD-62, **ASD-62A** AND FIXTURE PLAN.
2. INSTALL DOOR PROTECTORS AT DOCK DOOR WITH LEVELER.
3. RECOMMENDED WIDTH CLEARANCE BETWEEN TRUCKS AND ADJACENT WALLS.

Detail Based on:
CartStop LDP by McCue Corporation. For 6' - 8' Wide Doors Part No. CSLDP-KIT

DOCK DOORS INSTALLATION | DATE: 1/30/15 | SCALE: NONE | DRAWN: ZAW

MASTER SPECIFICATION DETAIL | ASD-152

ORIGINAL ISSUE DATE 2/20/06

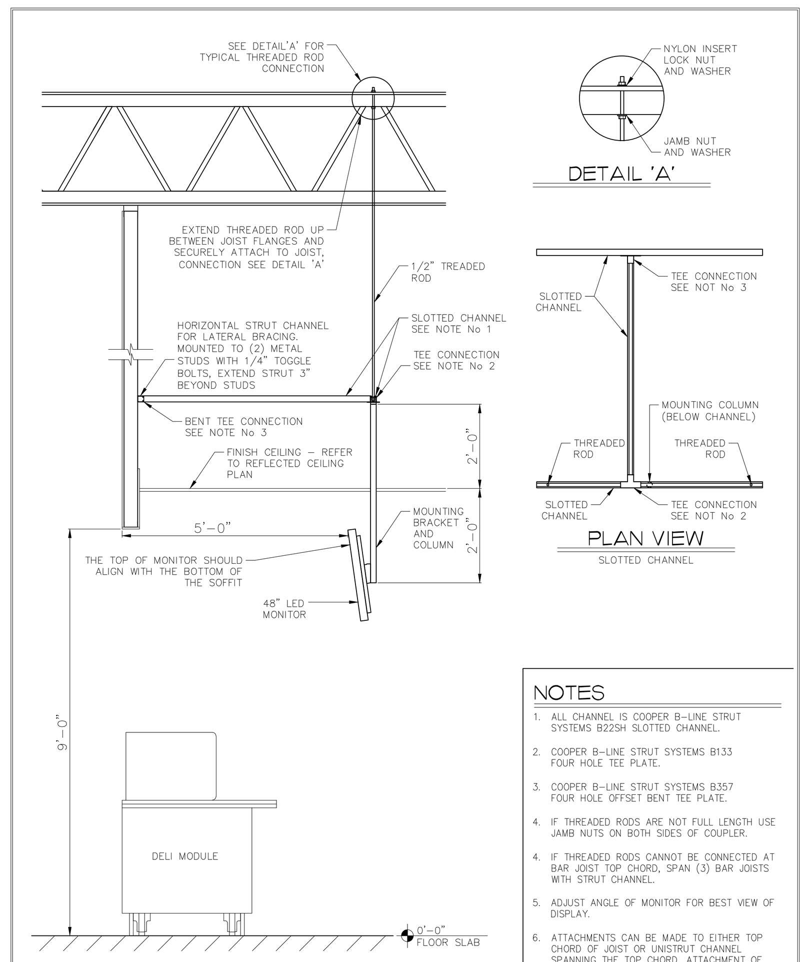

NOTES

1. ALL CHANNEL IS COOPER B-LINE STRUT SYSTEMS B22SH SLOTTED CHANNEL.
2. COOPER B-LINE STRUT SYSTEMS B133 FOUR HOLE TEE PLATE.
3. COOPER B-LINE STRUT SYSTEMS B357 FOUR HOLE OFFSET BENT TEE PLATE.
4. IF THREADED RODS ARE NOT FULL LENGTH USE JAMB NUTS ON BOTH SIDES OF COUPLER.
4. IF THREADED RODS CANNOT BE CONNECTED AT BAR JOIST TOP CHORD, SPAN (3) BAR JOISTS WITH STRUT CHANNEL.
5. ADJUST ANGLE OF MONITOR FOR BEST VIEW OF DISPLAY.
6. ATTACHMENTS CAN BE MADE TO EITHER TOP CHORD OF JOIST OR UNISTRUT CHANNEL SPANNING THE TOP CHORD, ATTACHMENT OF UNISTRUT TO ROOF METAL DECKING WILL NOT BE PERMITTED.

K-0056897 48" MONITOR
K-0053658 MOUNTING KIT

DELI MONITOR MOUNTING | DATE: 9/6/16 | SCALE: NONE | DRAWN: TMW

MASTER SPECIFICATION DETAIL | ASD-72

ORIGINAL ISSUE DATE 9/6/16

- FOR REFERENCE ONLY -

issued for: BIDS AND PERMITS 02/27/2024
90% OWNER REVIEW 01/11/2024

PROPOSED MINOR INTERIOR REMODEL FOR:

Kroger FRESH FOR EVERYONE™

STORE NO. D-707

2010 WITTAKER ROAD
YPSILANTI, MI 48197

THE KROGER CO. OF MICHIGAN

jeffery a. scott architects p.c.

32316 grand river ave. suite 200
farmington, michigan 48336-3261
(248) 476-8800 fax (248) 476-8833

KROGER ASDs GISDs & GIDs

project no.	sheet no.
23044	A5.1.2

PLOT FULL SIZE @ 30"x42"

copyright © 2024