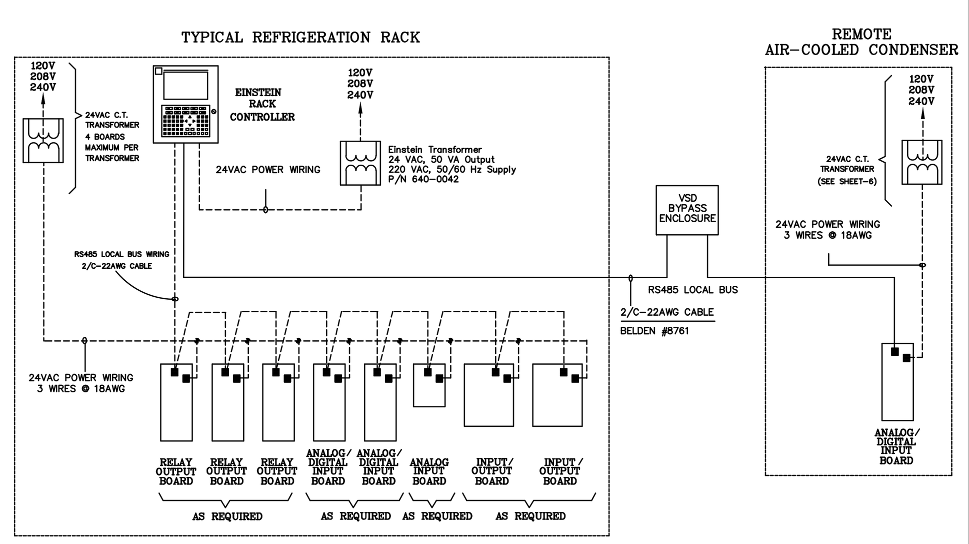

NOTES:

1. CONTRACTOR TO PROVIDE 3/4" CONDUIT FOR RS485 LOCAL BUS COMMUNICATION CABLE FROM EACH RACK CONTROLLER TO ASSOCIATED REMOTE CONDENSER.
2. CONTRACTOR TO INSTALL AND TERMINATE RS485 NETWORK. RS485 NETWORK SHALL BE DAISY CHAINED AND TERMINATED AT BOTH ENDS OF NETWORK.

1 EINSTEIN CONTROL SYSTEM -- REFRIG. RACK POWER & RS485 LOACL BUS WIRING | SCALE: NONE

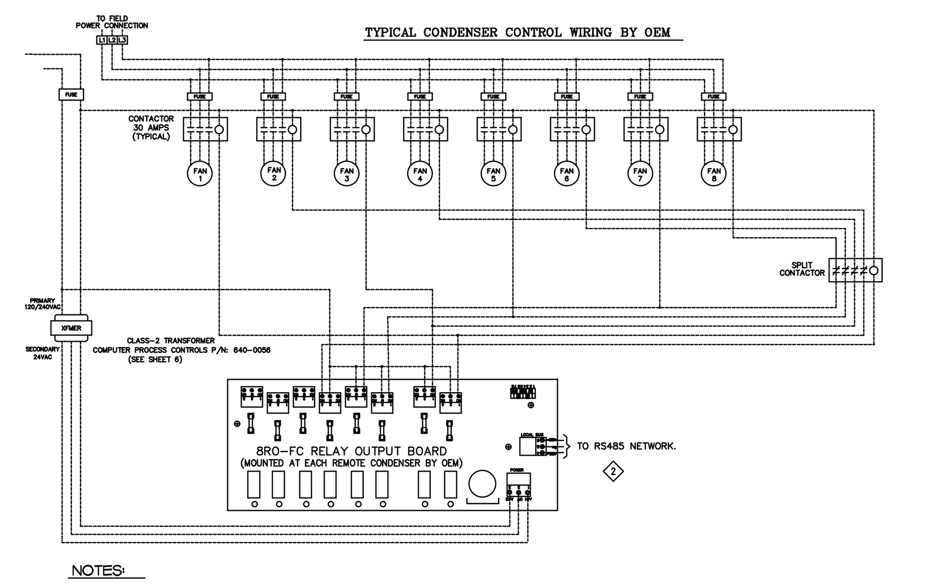

NOTES:

1. CONTRACTOR TO PROVIDE 3/4" CONDUIT FOR RS485 LOCAL BUS COMMUNICATION CABLE FROM EACH RACK CONTROLLER TO ASSOCIATED REMOTE CONDENSER.
2. CONTRACTOR TO INSTALL AND TERMINATE RS485 NETWORK. RS485 NETWORK SHALL BE DAISY CHAINED AND TERMINATED AT BOTH ENDS OF NETWORK.

2 EINSTEIN CONTROL SYSTEM -- CONDENSER CONTROL TERMINATION | SCALE: NONE

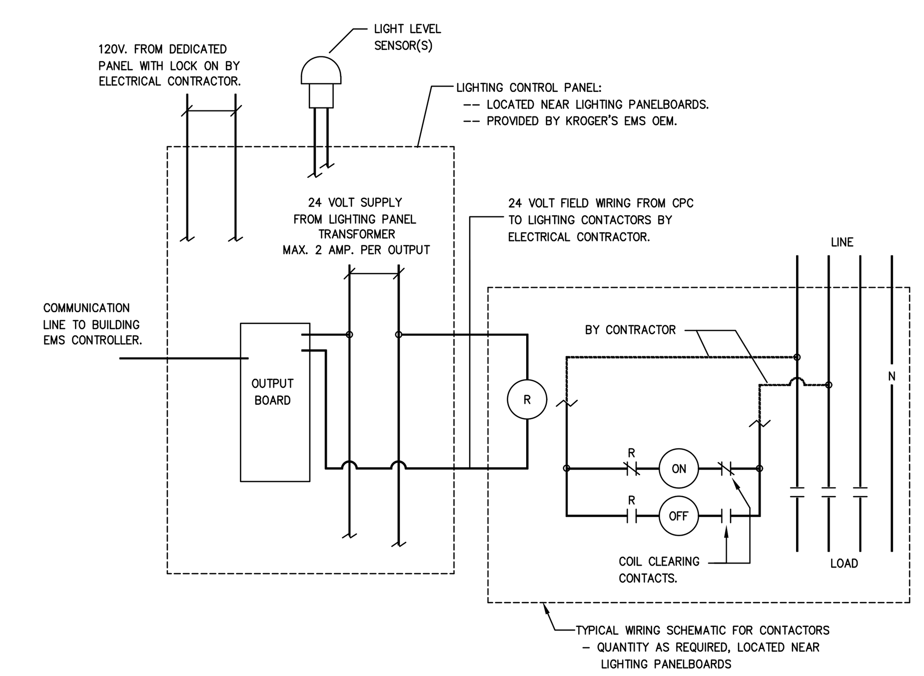

NOTES:

-- BUILDING CONTROLLER CONTROLS LIGHTING LOADS, VIA I/O BOARD LOCATED IN THE LIGHTING CONTROL PANEL.

-- BUILDING CONTROLLER INPUTS:
+ OUTDOOR LIGHTING LEVEL SENSOR
+ INDOOR LIGHT LEVEL SENSOR (FOR SKYLIGHT STORES)

-- SEE KROGER LIGHTING TEMPLATES FOR RECOMMENDED CONTROL LOADS.

CONTROL DEVICES:

(R) --- * TWO WIRE CONTROL RELAY OPTION FURNISHED WITH MECHANICALLY HELD CONTACTOR, BY KROGER'S SWITCHGEAR PROVIDER.

BUILDING CONTROLLER, LIGHTING PANEL, PHOTO SENSORS, CONTACTORS AND ENCLOSURES ARE FURNISHED BY KROGER.

5 EINSTEIN CONTROL SYSTEM -- MF88 LIGHTING CONTROL | SCALE: NONE

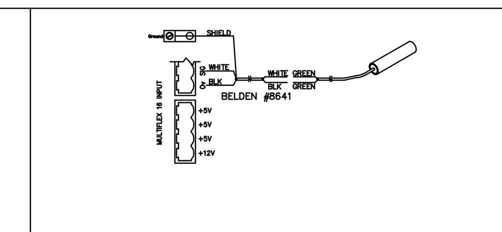

NOTES:
1. ONLY CONNECT SHIELD LEAD INSIDE CONTROL PANEL.
2. LEADS ARE NOT POLARITY SENSITIVE AT SENSOR
3. DIP SWITCH ON

FIG A 501-1122 GENERAL PURPOSE TEMP SENSOR

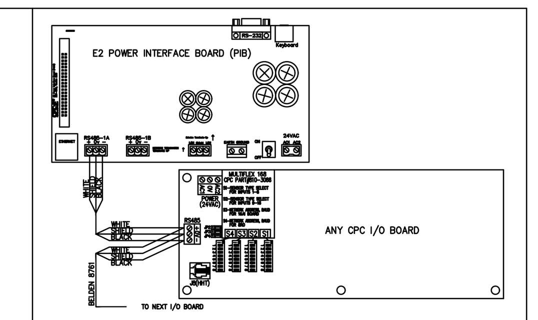

FIG B TYPICAL RS485 NETWORK WIRING

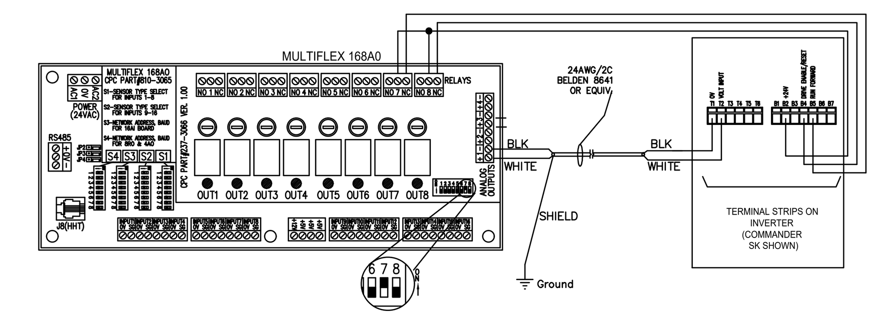

FIG C TYPICAL INVERTER WIRING

8 WIRING PRACTICES | SCALE: NONE

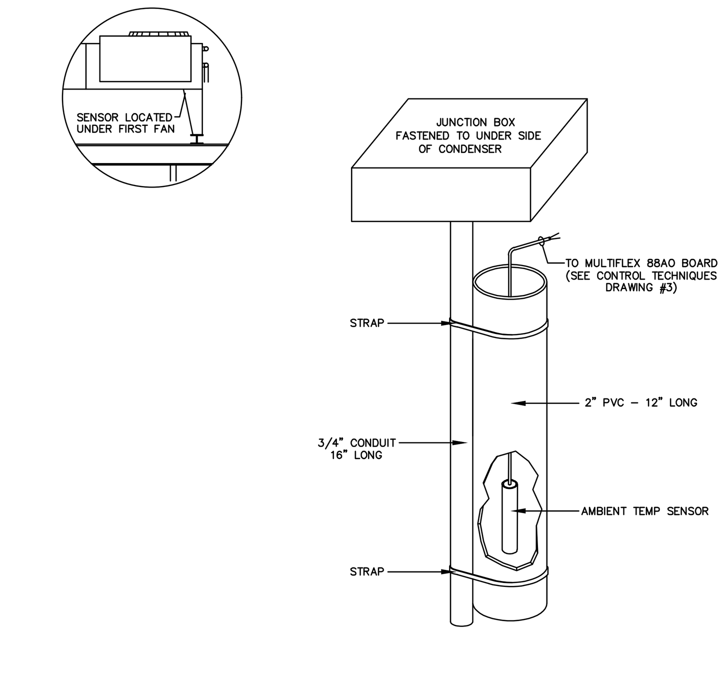

3 AMBIENT TEMPERATURE SENSOR DETAIL | SCALE: NONE

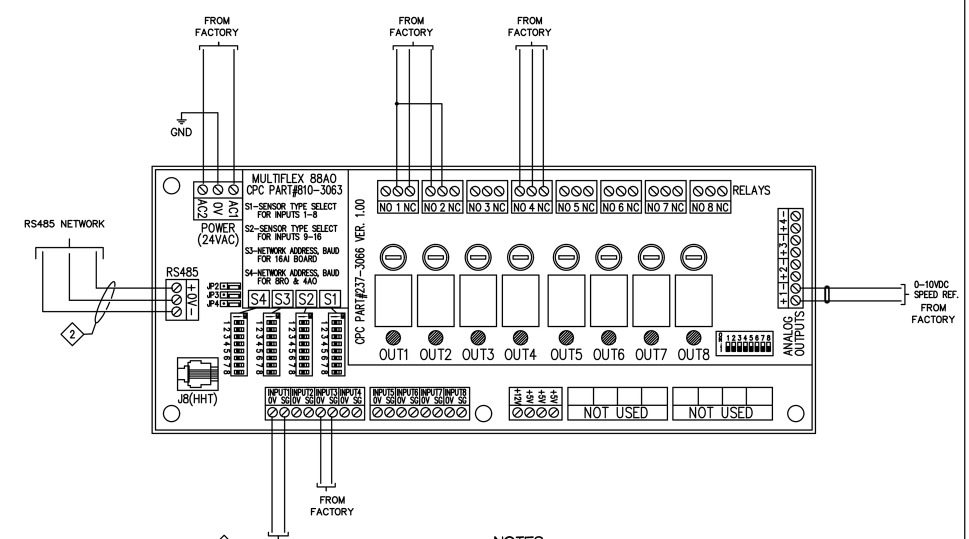

NOTES:

1. CONTRACTOR TO PROVIDE 3/4" CONDUIT FOR RS485 LOCAL BUS COMMUNICATION CABLE FROM EACH RACK CONTROLLER TO ASSOCIATED REMOTE CONDENSER.
2. CONTRACTOR TO INSTALL AND TERMINATE RS485 NETWORK. RS485 NETWORK SHALL BE DAISY CHAINED AND TERMINATED AT BOTH ENDS OF NETWORK.

4 TYPICAL 88A0 WIRING AT VSD BYPASS PANEL - INSTALLED BY OEM | SCALE: NONE

NOTES:
1. ALL WORK MUST BE PERFORMED TO MEET N.E.C. OR LOCAL CODES.
2. Drive must be protected by proper grounding and fuses - Consult manual for details.
3. Run power and motor leads in separate conduit. Never run control wiring in same conduit as High Voltage.
4. Connectors are spring type - insert a small blade screwdriver into slot to release wire.
5. Relay connections are next to power connections on drive. Location varys with drive model.

(X) = Refer to Appendix-A for cable specification

VFD Parameter List:

Par. #	Name	Setting	Data Value
0-03	Regional Settings	North America	
0-40	[Hand on] Key on LCP	Enabled	1
0-41	[Off] Key on LCP	Enabled	1
0-42	[Auto on] Key on LCP	Enabled	1
1-00	Configuration Mode	Speed Open Loop	1
1-03	Torque Characteristics	Condenser VT	
1-20	Motor Power [kW]	AS REQUIRED	
1-22	Motor Voltage	AS REQUIRED	
1-23	Motor Frequency	AS REQUIRED	
1-24	Motor Current	AS REQUIRED	
1-25	Motor Nominal Speed	AS REQUIRED	
1-29	Automatic Motor Adaptation (AMA)	Off	0
1-72	Start Function	Coast	
1-73	Flying Start	Enabled	1
3-02	Minimum Reference	0	0
3-03	Maximum Reference	60	60
3-15	Reference 1 Source	Analog Input 53	1
3-41	Ramp 1 Ramp Up Time	45	45
3-42	Ramp 1 Ramp Down Time	45	45
4-12	Motor Speed Low Limit [Hz]	12	12
4-14	Motor Speed High Limit [Hz]	60	60
4-16	Torque Limit Motor Mode	110%	110%
5-10	Terminal 18 Digital Input	Start	8
5-11	Terminal 19 Digital Input	No Operation	0
5-12	Terminal 27 Digital Input	Reset	1
5-40.1	Function Relay 1	No Alarm	160
5-40.2	Function Relay 2	No Operation	0
6-10	Terminal 53 Low Voltage	0.07	0.07
6-11	Terminal 53 High Voltage	10	10
6-14	Terminal 53 High Ref./Feedb. Value	0	0
6-15	Terminal 53 High Ref./Feedb. Value	60	60
31-01	Bypass Start Delay	0	0

FC 103 Typical Connections with E2 Modules

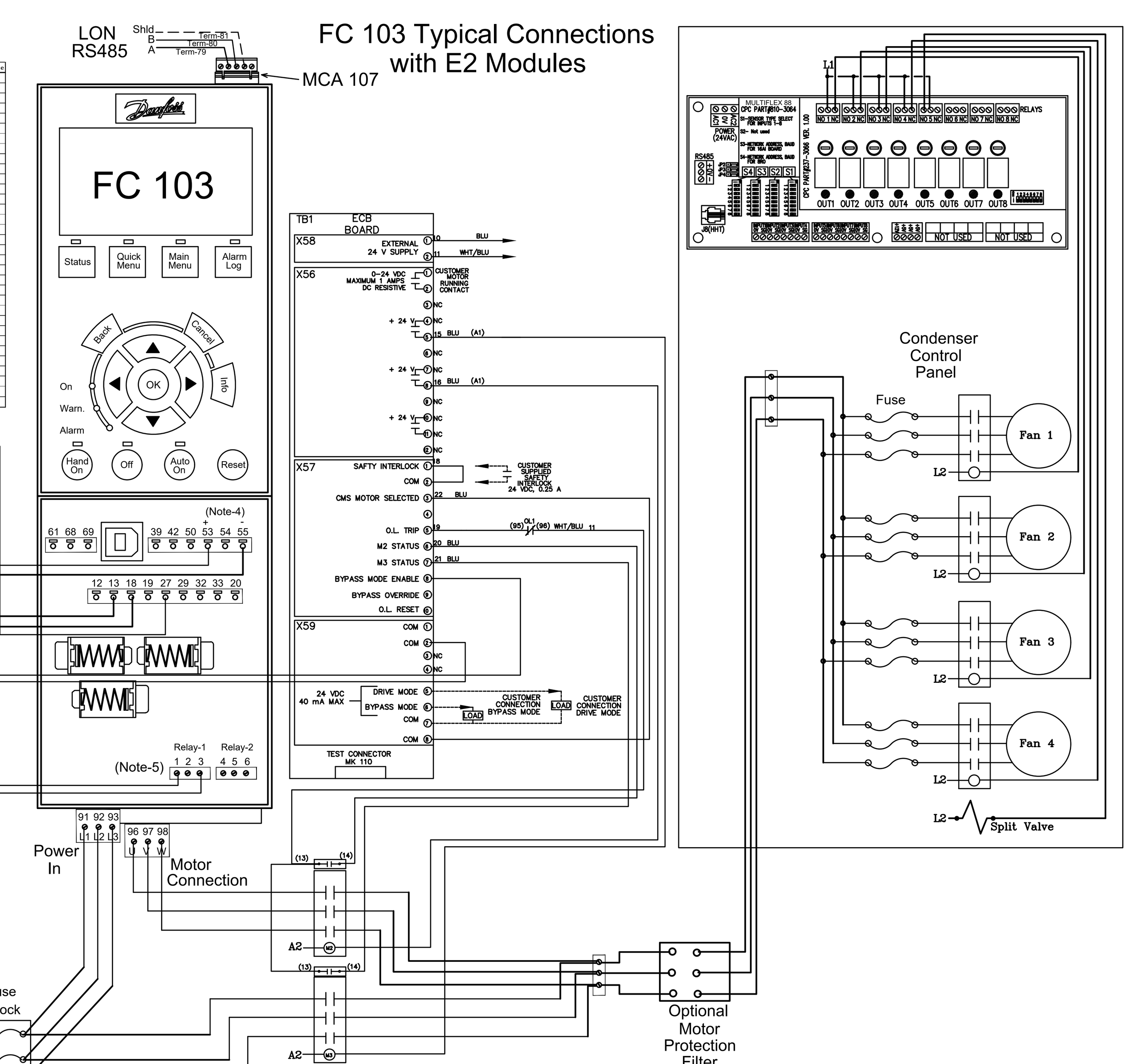

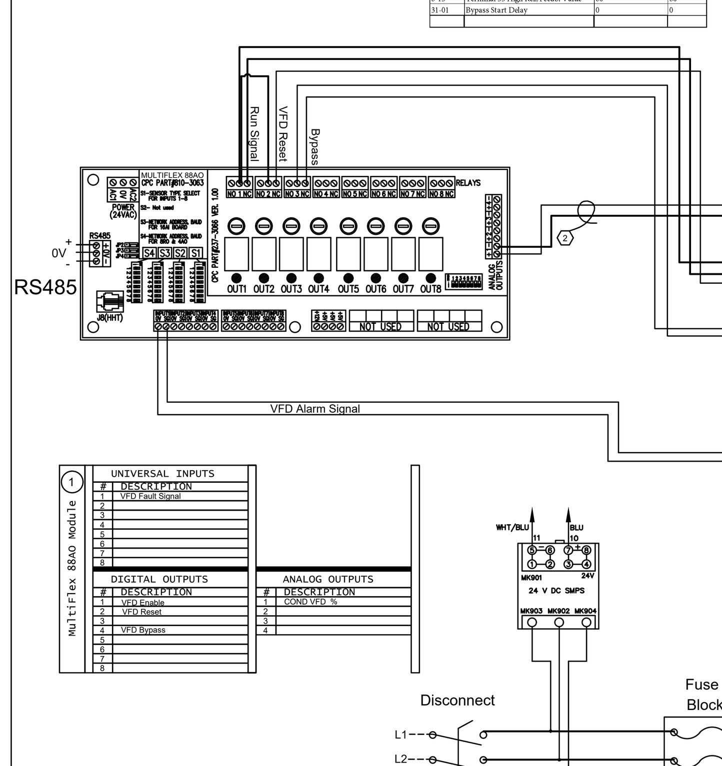

6 DANFOSS FC-103 TYPICAL CONNECTIONS WITH BYPASS PANEL | SCALE: NONE

FC 103 Typical CPC VFD Replacement

VFD Parameter List:

Par. #	Name	Setting	Data Value
0-03	Regional Settings	North America	
0-40	[Hand on] Key on LCP	Disabled	
0-41	[Off] Key on LCP	Disabled	
0-42	[Auto on] Key on LCP	Enabled	
1-00	Configuration Mode	Speed Open Loop	1
1-03	Torque Characteristics	Condenser VT	
1-20	Motor Power [kW]	AS REQUIRED	
1-22	Motor Voltage	AS REQUIRED	
1-23	Motor Frequency	AS REQUIRED	
1-24	Motor Current	AS REQUIRED	
1-25	Motor Nominal Speed	AS REQUIRED	
1-29	Automatic Motor Adaptation (AMA)	Off	
1-72	Start Function	Coast	
1-73	Flying Start	Disabled	
3-02	Minimum Reference	0.0	
3-03	Maximum Reference	60.0	
3-15	Reference 1 Source	Analog Input 53	1
3-41	Ramp 1 Ramp Up Time	5.0	5.0
3-42	Ramp 1 Ramp Down Time	10.0	10.0
4-12	Motor Speed Low Limit [Hz]	12.0	12.0
4-14	Motor Speed High Limit [Hz]	60.0	60.0
4-16	Torque Limit Motor Mode	MAXIMUM VALUE	
5-10	Terminal 18 Digital Input	Start	8
5-12	Terminal 27 Digital Input	Coast and reset inv	3
5-40.1	Function Relay 1	No Alarm	160
6-10	Terminal 53 Low Voltage	0.07	0.07
6-11	Terminal 53 High Voltage	10.00	10.00
6-14	Terminal 53 High Ref./Feedb. Value	0.000	0.000
6-15	Terminal 53 High Ref./Feedb. Value	60.000	60.000
\			

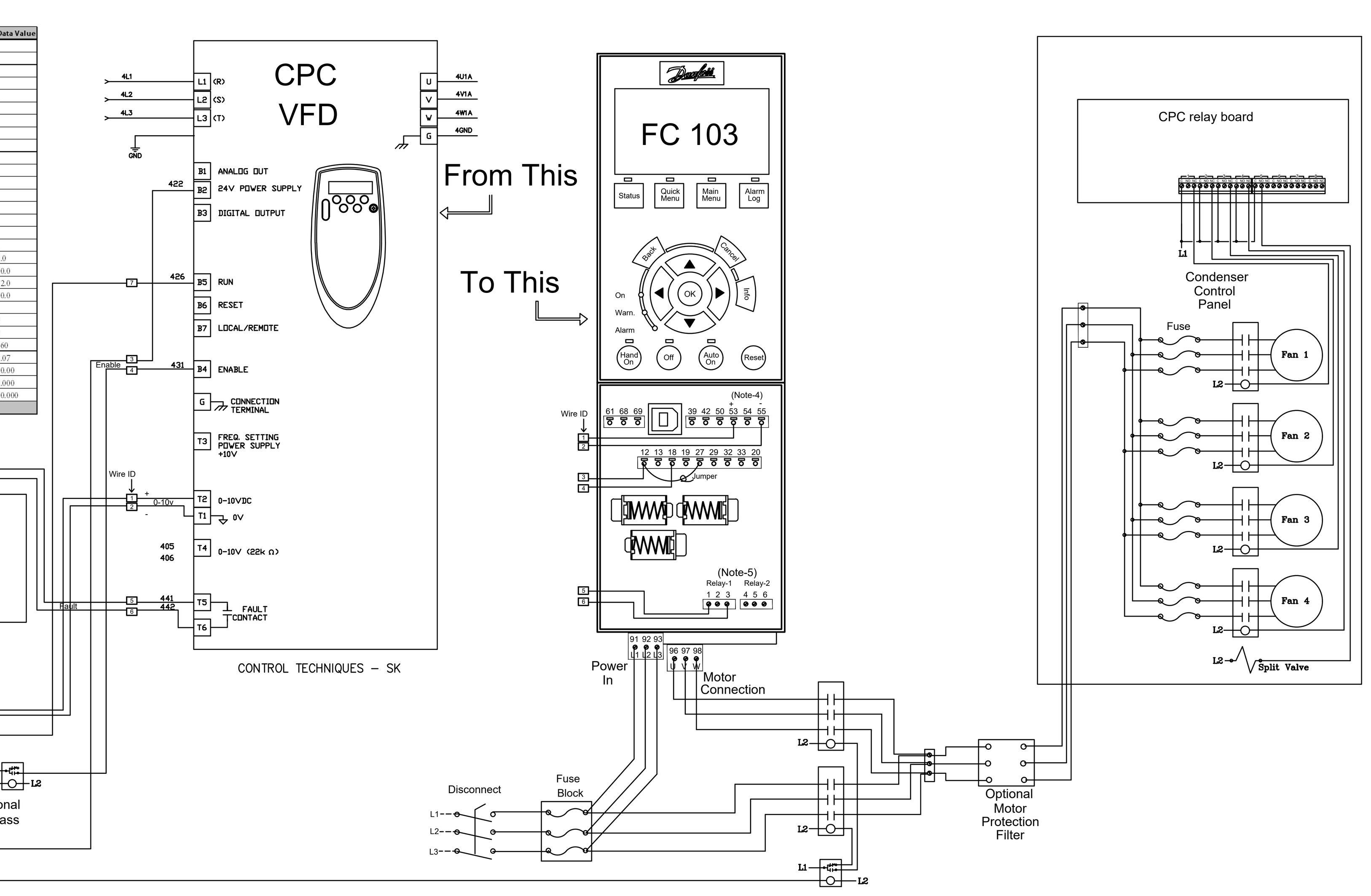

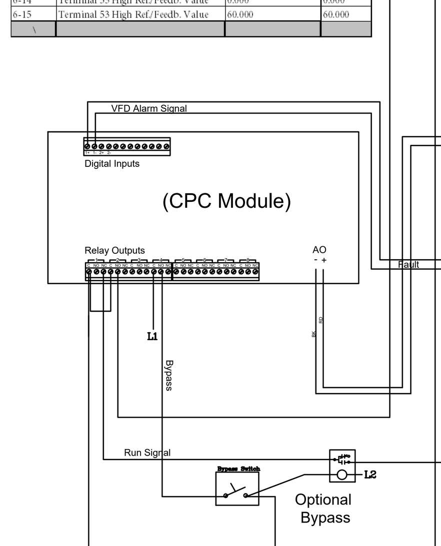

- FOR REFERENCE ONLY -

CONSTRUCTION GUIDELINES

6 DANFOSS FC-103 TYPICAL CPC VED REPLACEMENT | SCALE: NONE

ATTENTION DESIGN ENGINEERS:

THIS VENDOR SUPPLIED DRAWING IS PROVIDED FOR REFERNECE ONLY, AND MAY SHOW COMPONENTS THAT ARE NOT USED IN ALL STORES.

issued for:		
	BIDS AND PERMITS	03/06/2024
	DIRECT BUY QUOTE	02/19/2024
	90% OWNER REVIEW	01/25/2024

PROPOSED MINOR INTERIOR REMODEL FOR:

Kroger

STORE NO. D-711

7084 MILLER ROAD
SWARTZ CREEK, MI 48473

THE KROGER CO. OF MICHIGAN

jeffery a. scott architects p.c.

32316 grand river ave. suite 200
farmington, michigan 48336-3261
(248) 476-8800 fax (248) 476-8833

CPC DETAILS

project no. 23086

sheet no. EM-5

PLOT FULL SIZE @ 30"x42"

copyright © 2024