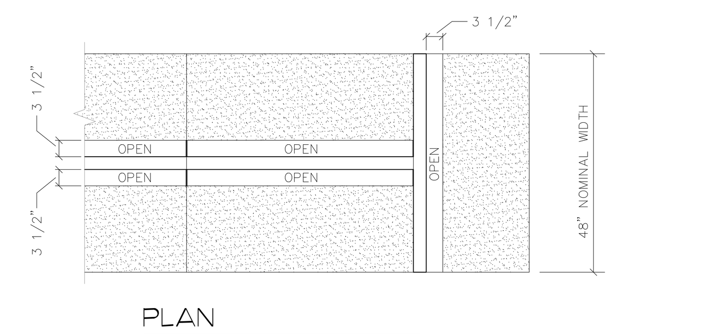

PLAN

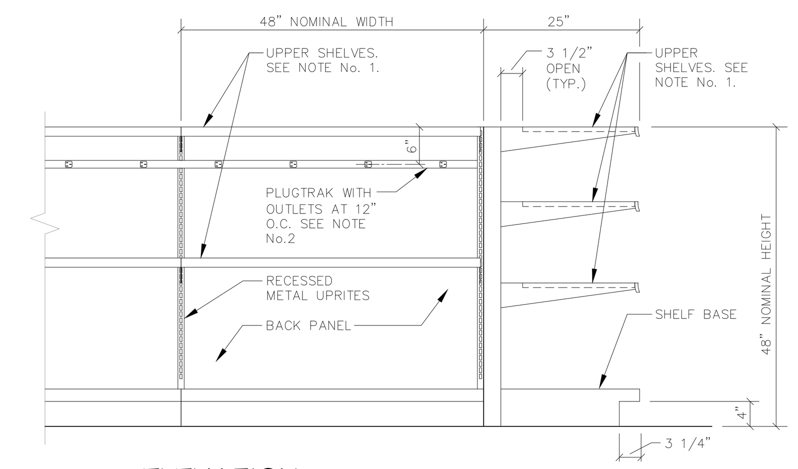

ELEVATION

NOTES:

1. FOR SHELVING REFER TO FIXTURE PLAN AND SHELVING ORDER INFORMATION.
2. HUBBELL, INC. HBL 24GB6121V 6' 20 AMP PLUGTRAK W/OUTLETS 12" O.C. CONNECT PLUGTRAK TO OVERHEAD OR UNDERGROUND AS REQUIRED.

Detail Based on:
LOZIER – Island Sections
– Wall End Display Units

LAMP DECK — DATE: 7/23/12 — SCALE: NONE — DRAWN: ZAW

MASTER SPECIFICATION DETAIL — EISD–3

ORIGINAL ISSUE DATE 7/23/12

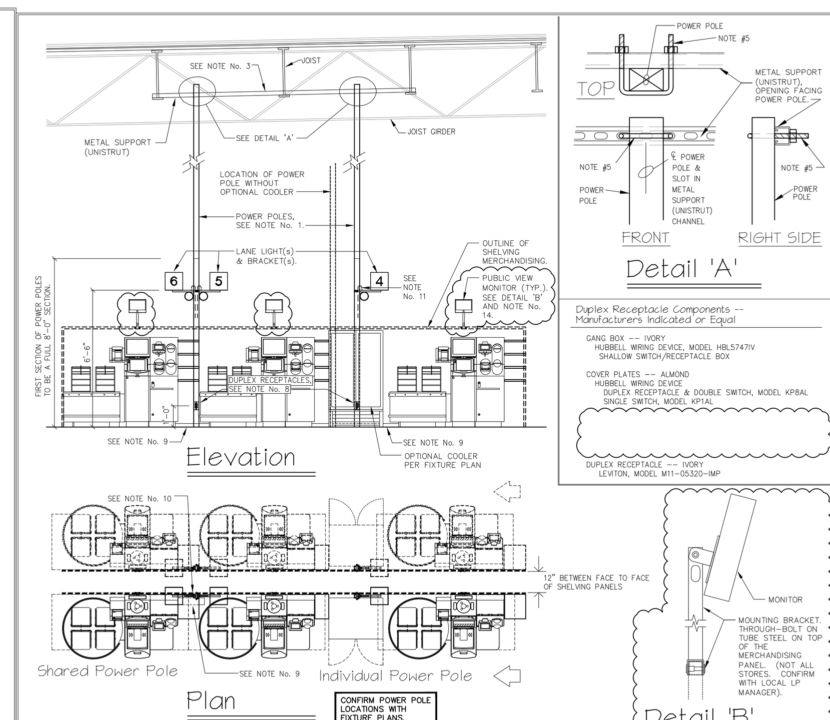

NOTES:

1. FOLLOW INSTRUCTIONS FROM CHECKSTAND MANUFACTURER SUPPLIED WITH POWER POLES FOR ASSEMBLY & INITIAL INSTALLATION. POWER POLES AS FOLLOWS:
   - PRE-CUT ACCESS HOLE ON 2" SIDE OF POLE AT LIGHT BRACKET MOUNTING HEIGHT.
   - PRE-CUT ACCESS HOLE ON 3" SIDE OF POLE AT HEIGHT INDICATED ON ABOVE ELEVATION, FOR DUPLEX RECEPTACLE.
2. POSITION POWER POLE AGAINST BACK OF SELF-SCAN SHELF THEN BOLT POLE BASE FLANGE TO FLOOR. CUT TOP OF POWER POLE AS NECESSARY AND ATTACH TOP OF POWER POLE TO BUILDING STRUCTURE.
3. WHEN TOP OF POWER POLE MISSES EXISTING STRUCTURAL STEEL, PROVIDE & SECURELY ATTACH A METAL SUPPORT, SUCH AS UNISTRUT CHANNEL, ACROSS NEAREST JOISTS.
4. SECURELY ATTACH POWER POLE TO EXISTING STRUCTURE OR NEW METAL SUPPORT (UNISTRUT). DO NOT DRILL THRU, RUN BOLTS THRU, OR SCREW INTO POLE, TO PREVENT SHARP EDGES WHICH COULD DAMAGE COMMUNICATION CABLES.
5. 3/8" x 5" INSIDE LENGTH x 4" INSIDE WIDTH SQUARE U-BOLT, TO CONNECT TO SLOTTED METAL SUPPORT (UNISTRUT) CHANNEL, WITHOUT DRILLING, IF POWER POLE IS CENTERED ON A SLOT IN METAL SUPPORT (UNISTRUT) CHANNEL. DO NOT OVER TIGHTEN U-BOLT NUTS, LEAVE LOOSE ENOUGH TO PERMIT VERTICAL MOVEMENT OF ROOF STRUCTURE. SIMILAR UNISTRUT HARDWARE MAY BE USED IN LIEU OF U-BOLTS, TO SECURELY ATTACH POWER POLES.
6. HEIGHTS INDICATED RESULT IN POSITIONING BRACKETS TO PARTIALLY COVER SOME ACCESS HOLES.
7. METAL SUPPORT, SQUARE U-BOLT AND ATTACHMENT HARDWARE, MC CABLE SUPPLIED AND INSTALLED BY CONTRACTOR. ALL OTHER COMPONENTS SUPPLIED BY OWNER.
8. CONTRACTOR TO SUPPLY AND INSTALL DUPLEX RECEPTACLES & COVER PLATES. CONTRACTOR TO COMPLETE WIRING INSTALLATION BETWEEN ELECTRIC CIRCUIT & RECEPTACLES.
9. CONTRACTOR TO FIELD FABRICATE AND INSTALL STAINLESS STEEL PROTECTOR FOR WIRING FROM POWER POLE AND BETWEEN CHECKSTAND, FASTEN TO FLOOR AS NEEDED.
10. REMOVE COVER FROM SECOND HOLE FOR BACK TO BACK LIGHTING BRACKET INSTALLATION.
11. LANE LIGHT IS SUPPLIED WITH 20'-0" LONG CORD AND STANDARD GROUNDED PLUG. CONTRACTOR TO RUN LANE LIGHT CORD THROUGH POWER POLE, AND OUT OF POWER POLE TO FIELD FABRICATED WIRE PROTECTOR, TO INSIDE OF SELF-SCAN UNIT. LANE LIGHT TO BE POWERED FROM REQUIRED CIRCUIT INSIDE SELF-SCAN UNIT. EXCESS CORD TO BE COILED IN BOTTOM OF SELF-SCAN UNIT.
12. ONE COMPRTMENT POWER POLES, LIGHTS, SWITCHES AND RECEPTACLES SUPPLIED AND INSTALLED BY CONTRACTOR.
13. ALL HIGH VOLTAGE CONDUCTORS MUST BE WRAPPED WITH STEEL JACKETING (MC CABLE).
14. MONITOR MOUNTED TO THE TOP STEEL TUBE OF THE MERCHANDISING RACK, CENTERED ON THE CENTER LINE OF CHECKSTAND SCALE. NOT ALL STORES. CONFIRM LOCATION WITH LOCAL LP MANAGER.

SELF-SCAN CHECKOUT POWER POLE & LANE LIGHT INSTALLATION — DATE: 5/9/18 — SCALE: NONE — DRAWN: ZAW

MASTER SPECIFICATION DETAIL — ESD–62A

ORIGINAL ISSUE DATE 5/7/10

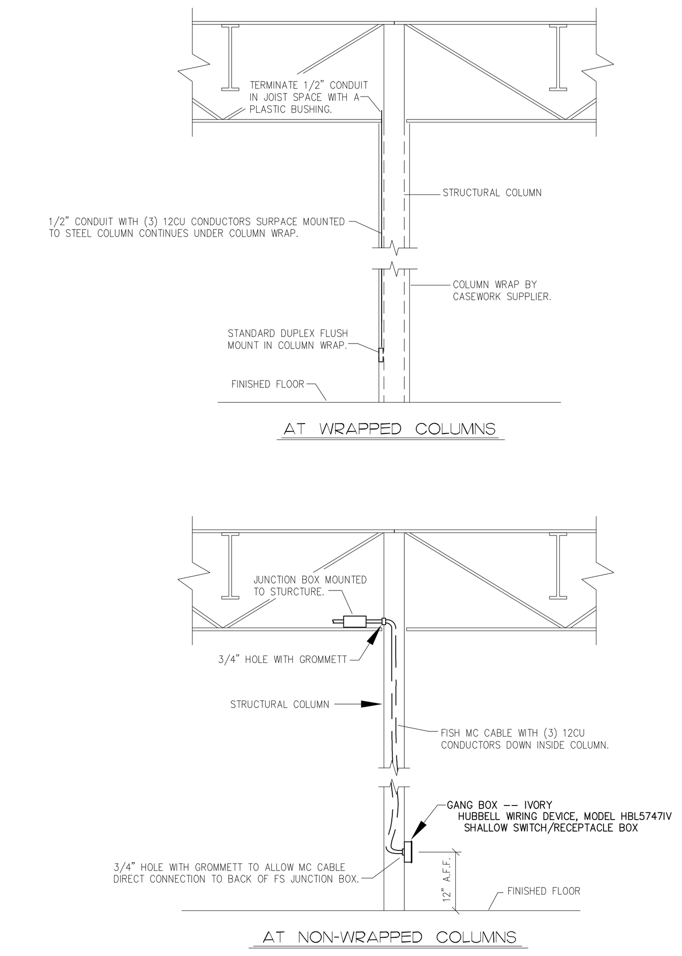

COLUMN MOUNTED CONVENIENCE OUTLET SECTIONS — DATE: 11/10/11 — SCALE: NONE — DRAWN: ZAW

MASTER SPECIFICATION DETAIL — ESD–54

ORIGINAL ISSUE DATE 1/30/09

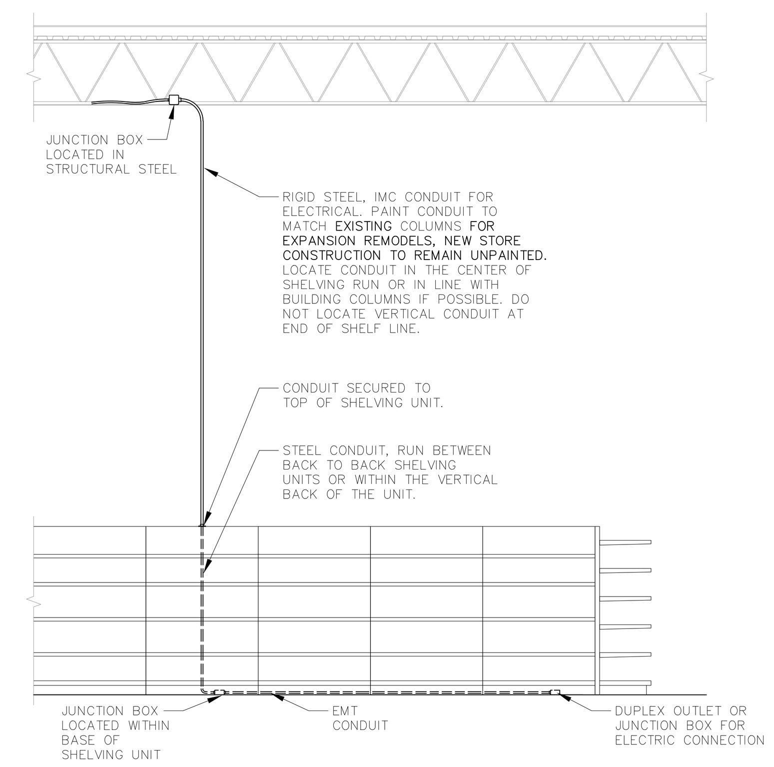

FRONT ELEVATION

NOTES:

1. DASHED LINES INDICATE HIDDEN CONDUIT IN SHELF BACK AND BASE.

SHELVING ELECTRIC FROM OVERHEAD — DATE: 11/10/16 — SCALE: NONE — DRAWN: ZAW

MASTER SPECIFICATION DETAIL — EISD–2

ORIGINAL ISSUE DATE 7/23/12

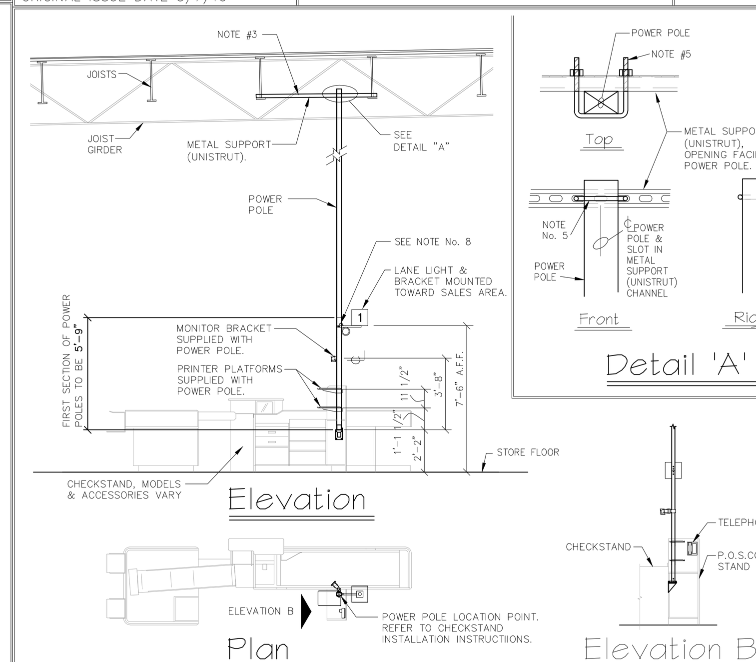

Notes:

1. FOLLOW INSTRUCTIONS FROM CHECKSTAND MANUFACTURER SUPPLIED WITH POWER POLES FOR ASSEMBLY & INITIAL INSTALLATION.
2. POWER POLE WEIGHT IS SUPPORTED BY CHECKSTAND. CUT TOP OF POWER POLE AS NECESSARY AND ATTACH TO BUILDING STRUCTURE.
3. WHEN TOP OF POWER POLE MISSES EXISTING STRUCTURAL STEEL, PROVIDE & SECURELY ATTACH A METAL SUPPORT, SUCH AS UNISTRUT CHANNEL, ACROSS NEAREST JOISTS.
4. SECURELY ATTACH POWER POLE TO EXISTING STRUCTURE OR NEW METAL SUPPORT. DO NOT DRILL THRU, RUN BOLTS THRU, OR SCREW INTO POLE, PREVENT SHARP EDGES WHICH COULD DAMAGE COMMUNICATION CABLES.
5. 3/8" x 5" INSIDE LENGTH x 4" INSIDE WIDTH SQUARE U-BOLT, TO CONNECT TO SLOTTED METAL SUPPORT (UNISTRUT) CHANNEL, WITHOUT DRILLING, IF POWER POLE IS CENTERED ON A SLOT IN METAL SUPPORT (UNISTRUT) CHANNEL. DO NOT OVER TIGHTEN U-BOLT NUTS, LEAVE LOOSE ENOUGH TO PERMIT VERTICAL MOVEMENT OF ROOF STRUCTURE. SIMILAR UNISTRUT HARDWARE MAY BE USED IN LIEU OF U-BOLTS, TO SECURELY ATTACH POWER POLES.
6. HEIGHTS INDICATED RESULT IN POSITIONING BRACKETS TO PARTIALLY COVER SOME ACCESS HOLES.
7. METAL SUPPORT (UNISTRUT), SQUARE U-BOLT AND ATTACHMENT HARDWARE, MC CABLE SUPPLIED AND INSTALLED BY CONTRACTOR. ALL OTHER COMPONENTS SUPPLIED BY OWNER.
8. LANE LIGHT IS SUPPLIED WITH 10'-0" LONG CORD AND STANDARD GROUNDED PLUG. CONTRACTOR TO RUN LANE LIGHT CORD THROUGH PREDRILLED HOLE IN POWER POLE AND OUT BOTTOM OF POWER POLE TO FACTORY INSTALLED RECEPTACLE IN CHECKSTAND BASE DESIGNATED FOR LANE LIGHT, RECEPTACLE IS CONTROLLED BY FACTORY INSTALLED SWITCH LOCATED ON CHECKSTAND.
   BEFORE TIGHTENING HARDWARE ON LANE LIGHT, ADJUST TO PARTIALLY CONCEAL HOLE. INSTALL SHELVES AND MONITOR BRACKET AT PREDRILLED LOCATIONS. CONTRACTOR TO RUN POWER CORD THROUGH PREDRILLED HOLES IN POWER POLE TO BE PLUGGED INTO DESIGNATED RECEPTACLES.
12. ONE COMPARTMENT POWER POLES, LANE LIGHTS, BRACKETS AND STANDS COME FROM CHECKSTAND MANUFACTURER SUPPLIED BY OWNER INSTALLED BY CONTRACTOR.
13. ALL HIGH VOLTAGE CONDUCTORS MUST BE WRAPPED WITH STEEL JACKETING (MC CABLE).

e-PRO NUMBERS:
Power Pole #K-0001345
Light Arm Bracket With Lamp #K-0015235
Cube for Lane Light #K-0037228
Express Topper #K-0037230
ADA Topper #K-0015366 (Deactivated)
Family Friendly Topper (Fred Meyer Only) #K-0045002
Express Lane Topper (Fred Meyer Only) #K-0045000

CHECKOUT POWER POLE AND LANE LIGHT INSTALLATION — DATE: 6/5/15 — SCALE: NONE — DRAWN: ZAW

MASTER SPECIFICATION DETAIL — ESD–62

ORIGINAL ISSUE DATE 12/19/07

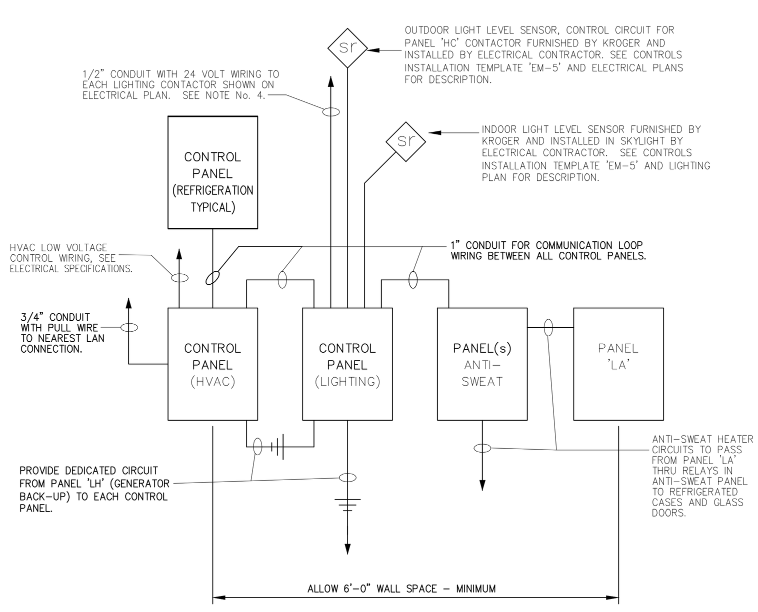

Notice:
Installing Contractor to adapt Control System as required for Controls installed -- CPC or Danfoss.

Notes:

1. ALL ELECTRICAL APPARATUS SHOWN, SHALL BE FURNISHED BY KROGER. ALL EQUIPMENT TO BE INSTALLED BY THE ELECTRICAL CONTRACTOR.
2. ALL CONDUIT AND 120 VOLT WIRING IS FURNISHED AND INSTALLED BY THE ELECTRICAL CONTRACTOR.
3. ALL LOW VOLTAGE HVAC CONTROL AND TELEPHONE WIRING IS BY OTHERS.
4. EACH LIGHTING CONTACTOR FURNISHED BY KROGER SHALL CONTAIN A TWO-WIRE CONTROL MODULE FOR 24 VOLT AC CONNECTION. THE ELECTRICAL CONTRACTOR SHALL PROVIDE THE 24 VOLT CONTROL WIRING TO EACH LIGHTING CONTACTOR COIL.

CONTROL PANEL DIAGRAM — DATE: 1/11/11 — SCALE: NONE — DRAWN: JFQ

MASTER SPECIFICATION DETAIL — ESD–53

ORIGINAL ISSUE DATE 2/20/06

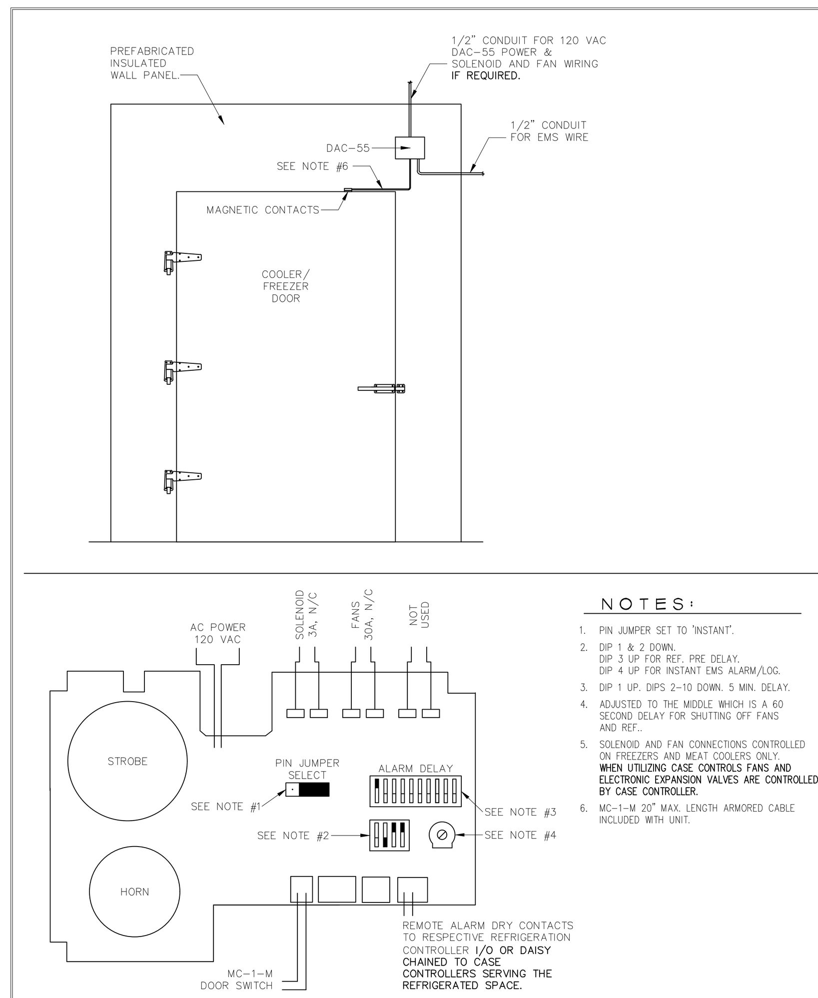

DAC-55 DOOR MONITOR

NOTES:

1. PIN JUMPER SET TO 'INSTANT'.
2. DIP 1 & 2 DOWN. DIP 3 UP FOR REF. PRE DELAY. DIP 4 UP FOR INSTANT EMS ALARM/LOG.
3. DIP 1 UP. DIPS 2-10 DOWN. 5 MIN. DELAY.
4. ADJUSTED TO THE MIDDLE WHICH IS A 60 SECOND DELAY FOR SHUTTING OFF FANS AND REF..
5. SOLENOID AND FAN CONNECTIONS CONTROLLED ON FREEZERS AND MEAT COOLERS ONLY. WHEN UTILIZING CASE CONTROLS FANS AND ELECTRONIC EXPANSION VALVES ARE CONTROLLED BY CASE CONTROLLER.
6. MC-1-M 20" MAX. LENGTH ARMORED CABLE INCLUDED WITH UNIT.

WALK-IN DOOR MONITOR — DATE: 5/18/15 — SCALE: NONE — DRAWN: TMW/ZAW

MASTER SPECIFICATION DETAIL — EISD–4

ORIGINAL ISSUE DATE 12/18/13

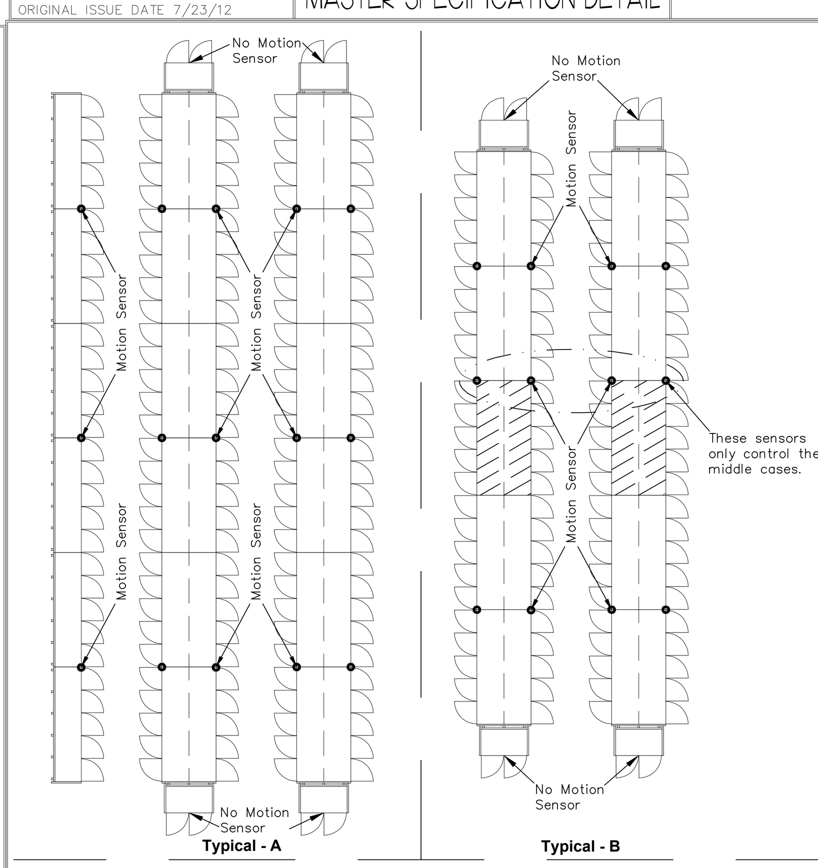

NOTES:

1. The Fixture Electrical Installer shall install each motion sensor to control 2 cases maximum. When an odd number of cases are in a row one motion sensor will control only one case. See Typical – B.
2. Motion sensors shall only be used on cases in an aisle. No motion sensors are to be placed on end caps, dairy doors, nutrition cases, etc.
3. Motion sensors shall be mounted to one side or the other of the case joint.
4. Owner Supplied Items: Watt Stopper motion sensor kit ePRO number K-0011767. Kit includes (1) power supply, (1) motion sensor, (1) 10' shielded cable, (1) connector and (1) splitter.
5. Refer to Kroger Installation Specifications for Watt Stopper Motion Sensor for additional installation information.

Based on:
Watt Stopper Motion Sensor
Model No. FS-705.

GLASS DOOR CASE MOTION SENSOR — DATE: 3/13/12 — SCALE: NONE — DRAWN: ZAW

MASTER SPECIFICATION DETAIL — EISD–1

ORIGINAL ISSUE DATE 10/2/09

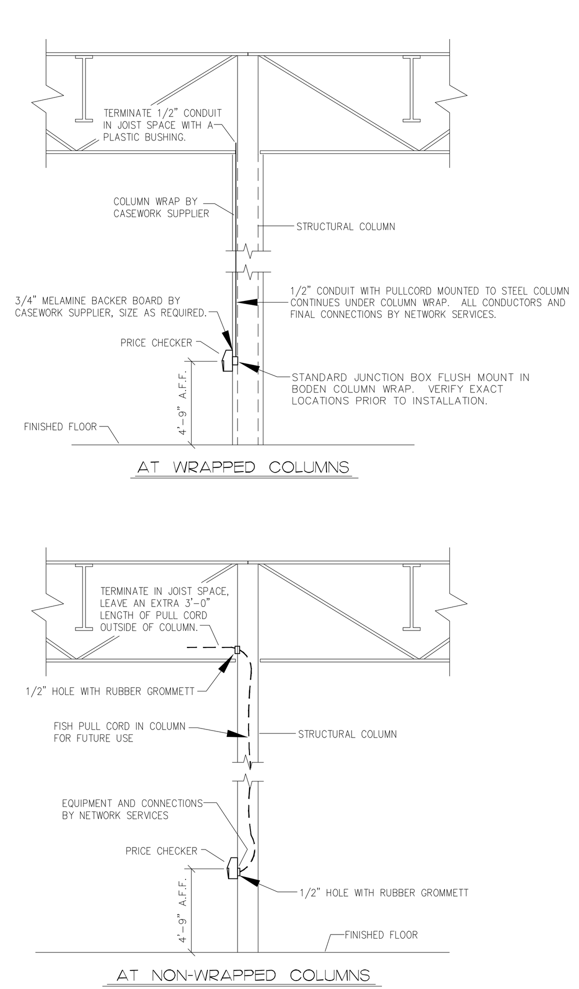

COLUMN MOUNTED PRICE CHECKER SECTIONS — DATE: 1/30/09 — SCALE: NONE — DRAWN: JFQ

MASTER SPECIFICATION DETAIL — ESD–55

ORIGINAL ISSUE DATE 1/30/09

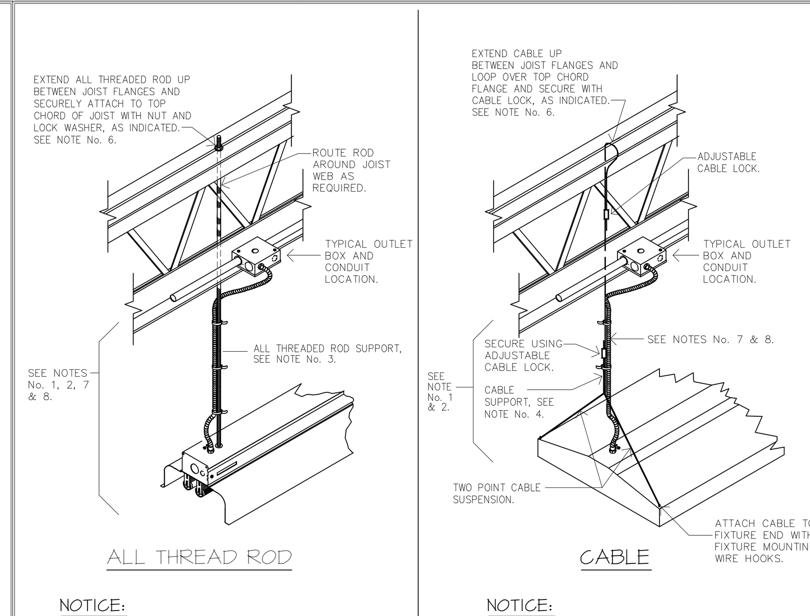

NOTICE:
INDIVIDUAL or CONTINUOUS ROW of FIXTURES ARE INDICATED IN THIS ILLUSTRATION.

NOTICE:
HIGH BAY TYPE OF FIXTURE IS INDICATED IN THIS ILLUSTRATION.

NOTE:

1. HANG INDIVIDUALLY MOUNTED FIXTURES BY ONE POINT AT EACH END (MINIMUM) PER MANUFACTURER'S INSTRUCTIONS. ATTACHMENTS MUST BE SUPPORTED AT INTERVALS OF EVERY 6'-0", COMPLYING WITH NEC 330.30.
2. FIXTURE SUPPORT AND POWER CONNECTION FURNISHED AND INSTALLED BY THE ELECTRICAL CONTRACTOR AS REQUIRED BY GOVERNING CODES. MOUNT FIXTURES BY ALL THREAD RODS OR CABLES.
3. 1/8" MINIMUM DIAMETER ALL THREAD ROD SUPPORT (NUMBER AS NEEDED TO SUPPORT FIXTURE RUN), SECURELY ATTACH BOTH ENDS OF ROD TO FIXTURE AND TOP OF JOIST AS REQUIRED.
4. 1/16" MINIMUM DIAMETER STANDARD STEEL WIRE ROPE OR STAINLESS STEEL AIRCRAFT CABLE (NUMBER & SIZE AS NEEDED TO SUPPORT FIXTURES). SECURELY ATTACH CABLE TO JOIST AND FIXTURE.
5. FOR STORE REMODEL USE FIXTURE MOUNTING SUPPORT TO MATCH EXISTING. FIXTURES TO BE LEVEL AND ALIGN WITH SURROUNDING FIXTURES. ALL THREAD ROD MAY BE USED AT LOCATIONS WHERE FIXTURES NEED TO BE PREVENTED FROM SWAYING.
6. ATTACHMENTS CAN BE MADE TO EITHER TOP CHORD OF JOIST OR UNISTRUT CHANNEL SPANNING JOIST, ATTACHMENT OF FIXTURES TO ROOF METAL DECKING WILL NOT BE PERMITTED.
7. METAL CLAD CABLE TYPE MC. SEE SPECIFICATION SECTION 26 05 19.
8. MINIMUM LENGTH METAL-CLAD CABLE TYPE MC. PAINT MC IF REQUIRED BY ARCHITECTURAL DRAWINGS TO MATCH ADJACENT PAINTED STRUCTURE. TYPICAL NEW STORE CONSTRUCTION IS UNPAINTED.

FIXTURE MOUNTING DETAIL — DATE: 5/31/23 — SCALE: NONE — DRAWN: KAP

MASTER SPECIFICATION DETAIL — ESD–51

ORIGINAL ISSUE DATE 11/15/05

- FOR REFERENCE ONLY -

issued for:		
	BIDS AND PERMITS	01/12/2024
	90% OWNER REVIEW	12/14/2023

PROPOSED MINOR INTERIOR REMODEL FOR:

Kroger — FRESH FOR EVERYONE

STORE NO. D-715
1215 24TH ST
PORT HURON, MI 48060

THE KROGER CO. OF MICHIGAN

jeffery a. scott architects p.c.
32316 grand river ave. suite 200
farmington, michigan 48336-3261
(248) 476-8800 fax (248) 476-8833

ELECTRICAL STANDARD DETAILS

project no. 23085 — sheet no. E5.1.2

PLOT FULL SIZE @ 30"x42"

copyright © 2024